Engineering Handbook

Volume 9

Computer-Aided Design (for Rocky Mountain and Pacific Power)

Engineering Publications

Revision Date: 4 Nov 15

Engineering Handbook
Vol. 9-Computer-Aided Design; Part A-General Standards
Published Date: 4 Nov 15
Last Reviewed: 4 Nov 15
©2015 by PacifiCorp.

9A—Computer-Aided Design (for Rocky Mountain and Pacific Power)

Contents

9A.1—General **1**

1.Scope 1

9A.2—Borders **2**

1.Scope 2

2.General 2

3.Border Insertion Point 2

4.Border and Paper Size 2

Table 1—Borders and Sizes 3

5.Layer Control 3

6.Revision Block 3

7.Drawing Numbers 5

7.1. When to Assign New Numbers 5

7.2. How to Use New Numbers 5

7.3. Numbering Convention 5

Figure 1—Drawing Number Diagram 6

Table 2—Borders and Sizes 6

7.4. Legacy Numbering Systems 7

7.5. XREF Drawing Numbers 7

8.Title Blocks 8

8.1. Converting Legacy Title Blocks to New Title Blocks 9

9A.3—Font and Text Style **11**

1.Scope 11

2.General 11

3.Use of Text, Symbols, and Fraction Codes 11

3.1. Special Characters 11

©2015 by PacifiCorp.

Table 3—Codes for Special Characters 11
3.2. Fractions 11
Table 4—Codes for Common Fractions 12
4.Text Size 12
5.Tables 12
9A.4—Drawing Revision 13
1.Scope 13
2.Revision Clouds 13
2.1. General 13
2.2. Revision Cloud Command 13
Figure 4—Revision Clouds 14
3.Updating with Revisions 14
3.1. Update Drawing Process 14
3.2. Revisions and Versions 14
3.2.1.Versions 15
3.2.2.Revisions 15
3.3. As-Builts 15
3.4. Update of Revision Block 16
3.5. Redlining Drawings 16
3.6. Color Code Key 16
3.7. Voiding & Superseding CAD or Image Files 16
3.7.1.Voiding CAD Files 16
3.7.2.Voiding Image Files 18
9A.5—Drawing Practices 19
1.Scope 19
2.Quality and Neatness 19
3. Drawing Scale 20

©2015 by PacifiCorp.

Table 5—Table of Drawing Scales (in feet) 20
Table 6—Table of Drawing Scales (in inches) 21
4. Paperspace / Modelspace 22
5.Multiple Paperspace Layouts (Tabs) Within One File 22
6.External Reference Drawings 22
6.1. XREF Naming 23
6.1.1.XT Topo Drawing Names (Civil Discipline) 23
6.1.2.XB Base Drawing Names (Foundation Discipline) 24
6.1.3.XE Electrical Drawing Names (Electrical Discipline) 24
6.1.4.XCH Control House Drawing Names (Electrical Discipline) 24
6.1.5.XG Grounding Drawing Names (Electrical Discipline) 24
6.1.6.XC Conduit Drawing Names (Electrical Discipline) 25
6.1.7.XL Landscape File Names (Electrical Discipline) 25
6.1.8.XEC Erosion Control Drawing Names (Civil Discipline) 25
6.2. Building the XREF File 25
6.3. XREFs in Sheet Files 26
6.4. Revising XREFs 26
6.5. Unacceptable Attachments 26
7.Hybrid Drawings 27
7.1. Attached Raster Drawings 27
7.2. Compound Externally-Attached Raster Drawings 28
8.Plotter Setup - Line Color to Line Width Assignment 28
Table 7—Line Color to Line Width Assignment 29
9.Exiting a Drawing 29
10.SNAP, OSNAP, and ORTHO Settings 30
11.Associative Dimensioning 30
11.1. General 30

©2015 by PacifiCorp.

11.2. Guidelines for Associative Dimensioning 30
11.3. Leaders 31
11.4. Drawing Units 31
12.Line-Type Scale 31
13.North Arrows 31
Figure 5—North Arrow With Twisted Viewport 32
14.Scale Bars 32
15.Manufacturer Drawings 33
16.Vicinity Maps 33
9A.6—Block Usage and Development 34
1.Scope 34
2.General Guidelines 34
3.Insertion Point 34
9A.7—CAD Standards and Template Files 35
1.Standard Files 35
2.Template Files 35
3.Checking Out Files for Modification 35
4.Final Issue For Construction (IFC) Procedures 35
5.CII (Critical Infrastructure Information) Drawings or Documents 37
6.Handbook Issuing Department 37

©2015 by PacifiCorp.

9A.1—General

1. Scope

This section of the company's Engineering Handbook contains general drafting standards applicable to all disciplines. For discipline-specific drafting standards, see Engineering Handbook Volume 9B.

The requirements described in this handbook and in 9B shall apply to all engineering design drawings created or revised either by internal personnel or by external engineering firms.

©2015 by PacifiCorp.

9A.2—Borders

1. Scope

This document standardizes the border format, which includes consistent drawing areas, revision block layout, and title block, for company engineering drawings. Multiple drawing sizes are provided to accommodate various needs. Modifications may not be made to standard company title blocks.

With company approval, any consultant's logo or insignia placed on the company's standard border shall remain as an independent block. The location of the consultant's logo or insignia on other types of standard company borders shall be evaluated on a case-by-case basis. All consultant logos or insignias shall be removed from electronic files prior to plotting the "FINAL" or "AS-BUILT" drawings (to be signed prior to the distribution and return of the files to the company).

2. General

Company standard AutoCAD borders shall be used during the creation of a new drawing or the editing of an existing drawing. These border template files contain standard layouts with the attributed title block.

All borders will have a border revision date in the lower left corner, just outside the border line. Each AutoCAD drafter/designer is responsible for ensuring that the most current version of the company border template is used. The most current borders are located in AutoCAD Support\Borders and the template files are located in the AutoCAD Support\Templates folder.

3. Border Insertion Point

All borders are to be inserted on layer zero at coordinates 0,0 in the paperspace layout environment. This configuration will set up the drawing area to conform to company standard printing and plotting capabilities.

4. Border and Paper Size

The borders shown below in Table 1 have been developed for use on all company drawings. Where possible, they are in conformance with ANSI Y14.1 standards to utilize the maximum paperspace.

Table 1 lists each border file name and provides drawing size, paper size, revision date, and suggested use.

©2015 by PacifiCorp.

Table 1—Borders and Sizes

File Name	Size	Rev. Date	Paper Size	Orientation	Suggested Use
CORP-A.dwg	A	11/01/06	8-1/2″ × 11″	portrait	Sketches and details
CORPA-TRAN.dwg	A	05/02/14	11″ × 8-1/2″	landscape	Sketches and details For Transmission use only
CORP-ECA.dwg	A	05/02/14	11″ × 8-1/2″	landscape	Communication block and level diagram
CORP-B.dwg	B	03/12/15	17″ × 11″	landscape	Sketched conductor details
CORPB-TRAN.dwg	B	11/01/06	17″ × 11″	landscape	Sketched conductor details For Transmission use only
CORP-D.dwg	D	05/02/14	34″ × 22″	landscape	Recommended for project size and all new standards drawings and XREF files
CORPD-TRAN.dwg	D	09/18/15	34″ × 22″	landscape	Recommended for plans & profiles and all new standard drawings For Transmission use only
CORP-C3D.dwg	D	05/02/14	34″ × 22″	landscape	For Civil 3D drawings only
SPCC 11X17	B	03/12/15	17″ × 11″	landscape	Sketches and details. For SPCC use only
SPCC 8X11	A	03/12/15	11″ × 8-1/2″	landscape	
CORP-B-GEN	B	09/16/15	17″ × 11″	landscape	Sketch details conductor and cable list For Generation Thermal use
CORP-B2-GEN	B	09/16/15	17″ × 11″	landscape	Sketch, details conductor and control wiring diagrams For Generation Thermal use (Dave Johnston Plant only)
CORP-D-GEN	D	09/16/15	34″ × 22″	landscape	For Generation Thermal use
CORP-E-GEN	E	10/21/15	44″X 34″	landscape	For Generation Thermal use

5. Layer Control

Standard layers are contained in various template files. They can be imported via discipline-specific AutoCAD palettes, or through the design center by accessing them in the AutoCAD support directory. These are standard layers and are not to be modified. Layers can be created on a case-by-case basis at the discretion of the CAD manager. Layers should be named in full without abbreviation and fitting to the entity, (e.g., “EASEMENT” rather than “ESMT”). Layer colors should be chosen so as to result in the appropriate line weight. See Table 7. Layers should not be turned off, but may be frozen so the LAYER ISOLATE command can be used. Never freeze or turn off the DEFPOINTS layer.

Use colors corresponding to company’s color table to differentiate objects, dimensions, and other lines. SeeTable 7 for weights and screening.

6. Revision Block

See Engineering Handbook 9B.10, for revision block procedures that apply to generation thermal.

©2015 by PacifiCorp.

An area to record drawing revisions is provided within each border. Any changes made to a drawing must be recorded in this area by inserting the revision block appropriate to that border. Revision blocks corresponding to the various border sizes are located at AutoCAD Support\Borders. Revision blocks may also be accessed via company tool palettes. Revision blocks are not to be modified, burst, exploded, or replaced with floating single line text. Editing to remove the hard text "WO#" is not permitted, nor is stretching/moving an attribute off its original X, Y location. Text shall not hover over the revision area of the title block. If multiple WO#'s are used, then the additional numbers are added to prompt 4 (REV-1 tag) followed by the revision description. Each revision block includes the following nine attribute prompts which must be completed when a revision is made to the drawing:

Prompt 1 REVISION NUMBER — The record starts with the first revision being"1". Each additional revision assumes the next higher number. The latest revision information shall always be placed in the next available space, with prior revisions noted in ascending order. When space is needed for another revision, delete the oldest revision and move the others up. Do not place the new revision in front of older revisions. Revision zero drawings may have a blank revision block.

Prompt 2 DATE — The date the revision is made (mo/dd/yy); the date must be consistent and current on all newly-issued, rev'd up project drawings.

Prompt 3 WO (work-order) NUMBER — company charge number. In certain circumstances where a number is not provided, or the WO number has closed, please follow these procedures:

1. If the number has expired, effort shall be made to have asset accounting reopen it.
2. If it cannot be reopened, the number is still used in the revision block, but time is charged to a capital number under the appropriate cost center.
3. If a modification is not associated to a WO number, then FM (Field Modification) is used as the WO number in the revision block. Time is charged to a capital number under the appropriate cost center.

Prompts 4&5 REVISION — A description/summary of changes to the drawing. This may be two lines if necessary. The description shall be specific for each drawing, including notes on what has been removed or added. For as-builts, the description shall be preceded by "AS-BUILT," followed by a detailed description of the change if possible. If it is not possible, a description such as "AS-BUILT MISC. WIRING CORRECTIONS" is sufficient. Descriptions are not used on communication block & level drawings.

Prompt 6 ENGINEER — The first initial and last name of the engineer (or consulting firm, if applicable).

Prompt 7 DESIGNER/DRAFTER — The first initial and last name of person (or consulting firm, if applicable) who drafted the changes.

©2015 by PacifiCorp.

Prompt 8 CHECKED — The first initial and last name of the person (or consulting firm, if applicable) responsible for checking the drawing

Prompt 9 APPROVED — The first initial and last name of the person who approved the changes to the drawing. If approvals are provided by an external engineering firm, the firm's acronym shall follow the signature with a forward slash ("/") separating the approver name and firm acronym.

7. Drawing Numbers

Company document control shall use the following procedures when assigning new drawing numbers:

7.1. When to Assign New Numbers

New drawing numbers shall be assigned when the need arises for new drawings to be created for new or existing company facilities. For new substation drawing numbers, contact PacifiCorp document control at Document Control Substation; for new transmission drawing numbers contact document control at Document Control Transmission Design.

7.2. How to Use New Numbers

Once the user has determined how many new numbers are needed, he or she shall contact PacifiCorp document control. The user will be given new numbers (the next in the drawing number series). New numbers are six digits with a suffix indicating the sheet number or the type of file. See Engineering Handbook 9B.10 for generation thermal numbering conventions for plant facilities.

7.3. Numbering Convention

The numbering convention shown in Figure 1 consists of a document number, a sheet number, and a drawing type number. It must appear as indicated in the drawing title block and the drawing file name. Table 2 contains some examples of drawing/document numbers for various types of files. Example title blocks are shown in Figure 2 and Figure 3. Instructions for non-AutoCAD files used in design projects (e.g. Excel files) may be found at AutoCAD Support\Forms. See Engineering Handbook 9B.10 for generation thermal numbering conventions.

©2015 by PacifiCorp.

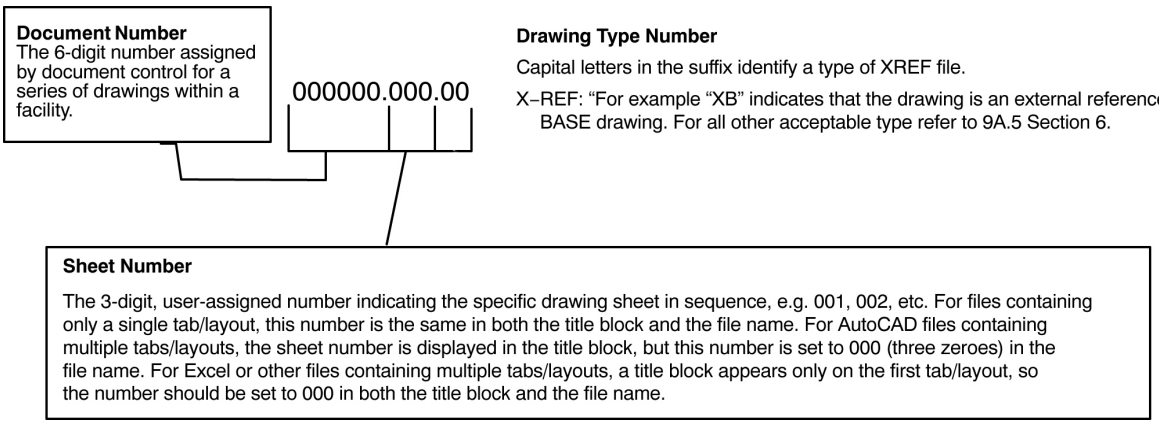

Figure 1—Drawing Number Diagram

Table 2—Borders and Sizes

Description	File Name	Title Block Name
Single sheet stand-alone drawing	100366.001.dwg	100366.001
Drawing with multiple tabs/layouts (see Engineering Handbook 9B.3):		
Layout 1	110273.000.dwg	(Tab name) 001
Layout 2	110273.000.dwg	(Tab name) 002
Layout 3	110273.000.dwg	(Tab name) 003
Layout 4	110273.000.dwg	(Tab name) 004
Multi-tab Excel file (e.g. drawing list, bill of materials, conduit & cable list, RTU list, etc.):		
Layout	109639.000.xls	109639.000
Sheet 10 of a Transmission line plan drawing	100012.010.dwg	100012.010
Sheet A for Transmission line plan for plan drawing #100012.001	100012.001A.dwg	100012.001A
Sheet B for Transmission line profile for plan drawing #100012.001	100012.001B.dwg	100012.001B
Substation Base XREF for foundation plan #123459.001	123459.000.XB.dwg	123459.000.XB
Substation Topo XREF for grading plan #123457.001	123457.000.XT.dwg	123457.000.XT
Raster image file for #100205.001	100205.001.tif	

Note: This table does not apply to generation thermal.

The "base" drawing will have its own drawing number series, with the appropriate file extension.

A raster file will have the same number as the drawing to which it is attached, with the appropriate file extension.

©2015 by PacifiCorp.

7.4. Legacy Numbering Systems

Drawings created prior to the use of the six-digit numbering system that have new XREFs or raster images attached shall retain the legacy drawing number.

If necessary, new drawings may be added to an existing legacy drawing number series. For example, if sheet 10 is added to a series of nine sheets, the total number of sheets shall be updated on sheet one (from “1 OF 9” to “1 OF 10”). The new, sheet-10 drawing shall use the legacy drawing number, and shall have all new information in the title block, even if the drafting is taken in part from one of the other sheets. The new sheet shall be revision zero.

This procedure does not apply to transmission or generation drawings; see Engineering and Asset Management Procedure 097, *Transmission Documentation* and Engineering Handbook 9B.10.

The examples in Section 7.5 show one legacy numbering system but may be applied to other legacy numbering in a similar manner.

7.5. XREF Drawing Numbers

General plans, foundation plans, grounding plans, and conduit & cable plans shall always have XREFs attached. Drawings and XREFs shall be numbered as follows:

52362A01.dwg (General Plan), XREF name = 52362A00.XE
52363A01.dwg (Foundation Plan), XREF name = 52363A00.XB
52364A01.dwg (Grounding Plan), XREF name = 52364A00.XG
52365A01.dwg (Conduit & Cable Plan), XREF name = 52365A00.XC

A new XREF shall use a legacy number if no XREFs exist for drawings with legacy numbers. For example, a new base plan for existing drawing 52363A01 shall be numbered 52363A00.XB.

Raster images shall be titled with the same number as the associated drawing. For example, 52351A00.XB.tif for drawing 52351A00.XB.dwg.

1. The foundations will become the XB and effort will be made to extract existing entities that belong to the XB such as:

   a. Foundations

   b. Fence

   c. Property lines

   d. Roads

These XREFs will follow the criteria in 9A.5, Section 6.2, *Building the XREF File*, which includes baselines (if the location is known). The insertion point will be at 0,0.

©2015 by PacifiCorp.

8. Title Blocks

Title blocks are attributed for use with the electronic drawing management system (DM). The attributed title blocks have been designed to be inserted into new or existing drawings and are required in all company engineering AutoCAD files. See Engineering Handbook 9B.10 for generation thermal title blocks.

The following is a list of the attributes that AutoCAD prompts when the title block is inserted:

1. DISCIPLINE — The discipline name should be chosen from the controlled vocabulary list (CVL) provided in DM. For a complete list of discipline names available for entry at this prompt, please see Engineering Documentation Policy 104, *Indexing of Discipline and Document Type*.

1.A. FACILITY NAME AND TYPE — This field shall display the facility name and the type without voltage. An exception to this is that Dixonville 500 (without the KV) is a valid name and 500 is not to be removed

2. FACILITY NAME/EDMS (D-style title block only) — For DM indexing purposes only; the facility name is not visible in drawing.

   LINE NAME/FACILITY NAME (CORPD-TRAN title block only)

3. FACILITY TYPE/EDMS (D-style title block only) — For DM indexing purposes only; the facility type is not visible in the drawing.

   VOLTAGE/FACILITY TYPE (CORPD-TRAN title block only)

4. FACILITY LOCATION (CORP-D title block only) — City, State (if the location is in a city); County, State (if the location is in a county).
5. DOCUMENT TYPE — The document type should be chosen from the controlled vocabulary list provided in DM. For a complete list of allowable document types, please see Policy 104, *Indexing of Discipline and Document Type*.
6. DRAWING TITLE — No entry is required. This field may be used for additional drawing information, such as substation voltage.
7. DRAWING NUMBER — Five- or six-digit drawing number with the appropriate sheet number suffix.
8. REVISION NUMBER — Current revision number. If the drawing hasn't yet been revised, the default revision (or "rev") number is zero. The revision block for rev-zero drawings shall remain blank. Drawings under review shall have a letter designation entered behind the proposed revision number; the alpha character shall be removed once the design is approved. See Engineering Procedure 211, *Substation Engineering AutoCAD Review for External Consultants*, for more details.
9. SHEET NUMBER — The first drawing of a set should indicate the current sheet number ("1") and the total number of drawings in the set, e.g. sheet "1 OF 4"
   (or "1 OF 1" if sheet 1 is the only sheet). All other sheets in the set should indicate only the current sheet number, e.g. "2," "3." If new drawings are added to the set, the total number of

©2015 by PacifiCorp.

sheets must be revised on the first sheet. For transmission plans & profiles, each sheet shall indicate the total number of drawings. For example, “1 OF 4,” “2 OF 4,” etc..

10. DRAWING SCALE — As noted, none, or a valid scale.

    e. HORIZONTAL SCALE (CORPD-TRAN title block only) — horizontal scale, e.g., HOR. 1″=400′.

    f. VERTICAL SCALE (CORPD-TRAN title block only) — vertical scale, e.g., VER. 1″=40′.

11. PROJECT/ER NUMBER — Department-specific
12. PL NUMBER — Plant locality number. This is required on all drawings.
13. DRAWING DATE — The issue date of the ORIGINAL drawing (“revision 0”), in the format MM/DD/YYYY. The date must be consistent and current on all newly-issued revision zero project drawings. Once issued, the date in the title block shall remain unchanged for the life of the drawing.

13A. LINE CODE (CORPD-TRAN title block only) — alphanumeric transmission line designation

14. ENGINEERED BY — The engineer’s first initial and last name, e.g. “J. DOE.”
15. DESIGNED BY — The designer’s first initial and last name, e.g. “J. DOE.”
16. DRAWN BY — The drafter’s first initial and last name, e.g. “J. DOE.”
17. CHECKED BY — The checker’s first initial and last name, e.g. “J. DOE.”
18. DISCIPLINE ENGINEER — The discipline engineer’s full name. This field may sometimes be blank.
19. PROJECT ENGINEER — The project engineer’s full name.
20. APPROVAL ENGINEER — The approval engineer’s full name.

NOTE: If signatures are from an external engineering firm, signature fields 14 through 19, above, shall contain signatures, and shall also be followed by the acronym of the firm separated by a forward slash, for example, “J. DOE/CRA.”

Names shall be entered consistently (including spacing) in order for the BAD audit tool to review common attributes. No leading or trailing spaces shall be inserted within the attribute fields.

8.1. Converting Legacy Title Blocks to New Title Blocks

See Engineering Handbook 9B.10 for converting generation thermal title blocks

All legacy drawings being modified shall have the title blocks updated to the latest D-style title blocks. The nomenclature of existing title blocks is transferred to the new title block. Certain missing fields or incorrect nomenclature shall be placed or corrected; other missing nomenclatures remain unchanged. See Volume 9B.2, Section 3.1 for further information on which nomenclatures shall be placed or corrected.

©2015 by PacifiCorp.

It is not necessary to transfer the legacy revision information when converting the title blocks. The drawing is rev'd up to the next number with a description of the current modifications.

©2015 by PacifiCorp.

9A.3—Font and Text Style

1. Scope

This engineering handbook document specifies the font and the codes for symbols and fractions used
in AutoCAD drawings.

2. General

Text on new company drawings shall use the simplex1.shx font as supplied by the company. Company AutoCAD technical support will provide this font for in-house personnel and for consultants who develop or edit AutoCAD drawings for the company. Before simplex1.shx can be used, the font file must be copied to the user's font directory.

The generation thermal group does not use the simplex1.shx or allow the use of custom fonts. See Engineering Handbook 9B.10 for generation thermal font preferences.

3. Use of Text, Symbols, and Fraction Codes

The simplex1.shx font contains all standard keyboard characters, fractions, and other special characters. Smaller-sized characters, subscripts, underscoring, special expanded ASCII characters and fractions can be provided using %% codes, as described in Sections 3.1 and 3.2.

3.1. Special Characters

The following table below gives %% codes for commonly used symbols.

Table 3—Codes for Special Characters

Symbol	Code	Symbol	Code	Symbol	Code
° *(degree)*	%%127 or D	±	%%128 or P	Ø	%%129 or C
℞	%%168	℄	%%169	⊠	%%199

Note: This table does not apply to generation thermal.

3.2. Fractions

The table below lists the %% codes for fractions. Fractions can also be typed into MTEXT and tables with stacked properties, set to diagonal at 70 percent of text size.

©2015 by PacifiCorp.

Table 4—Codes for Common Fractions

Character	Code	Character	Code	Character	Code	Character	Code
1/4	%%130	5/16	%%138	5/32	%%146	21/32	%%154
3/4	%%131	7/16	%%139	7/32	%%147	23/32	%%155
1/8	%%132	9/16	%%140	9/32	%%148	25/32	%%156
3/8	%%133	11/16	%%141	11/32	%%149	27/32	%%157
5/8	%%134	13/16	%%142	13/32	%%150	29/32	%%158
7/8	%%135	15/16	%%143	15/32	%%151	31/32	%%159
1/16	%%136	1/32	%%144	17/32	%%152	1/2	%%160
3/16	%%137	3/32	%%145	19/32	%%153		

Note: This table does not apply to generation thermal.

4. Text Size

Regular text shall plot at a height of 3/32″, or 1/8″ for headings/subheadings.

For communication drawings only, on D-size sheets regular text shall plot at a height of 1/8" and headings/subheadings at 3/16″. On A-size, block and level drawings regular text and headings/subheadings shall plot at a height of 1/16″.

Single-line text (DTEXT) is preferred throughout drawings where single strings of text are used. The company has predefined text styles S1 through S8 for use when the text needs to be narrowed. The text style shall be changed in lieu of manually modifying the text width through Chprop or the attribute editor.

Multiline text (MTEXT) is preferred where multiple lines of text are needed, such as notes.

5. Tables

AutoCAD tables may be used where applicable for notes, charts, and legends. Predefined table styles specific to power delivery are accessed from the standard palette. Tables shall not be exploded.

©2015 by PacifiCorp.

9A.4—Drawing Revision

1. Scope

This section of the company engineering handbook lists the procedures to be followed when revising drawings.

2. Revision Clouds

2.1. General

All engineering groups, contractors, and consultants shall use revision clouds to identify changes on drawings for construction purposes.

Revision clouds from previous revisions are to be removed and only the clouds for current revisions shall be shown. If construction for the previous revision is still ongoing, the construction crew(s) will be required to work from two or more prints of the same drawing. It is not acceptable to show multiple revisions on the same drawing.

2.2. Revision Cloud Command

The company encourages the use of AutoCAD's REVCLOUD command for creating revision clouds. The arc sizes of revision clouds shall appear consistent throughout the drawing, and shall be relative to the size of the object being clouded. Rev clouds shall be placed on the rev layer, and broken when necessary to avoid crossing through text or obstructing the design.

In general, ORTHO shall be turned off to avoid linear clouds running parallel to the object being clouded. The clouds are to be placed around entities in their current space (e.g., entities in modelspace will have the cloud also in modelspace). The calligraphy option of the cloud command shall not be used. Any text or leaders associated with the clouds are to be on the rev layer.

Triangles shall not be used to label revision clouds when different work order numbers occur at the same time. In such cases, a string of text or the dynamic rev-block may be used to associate clouds to the appropriate number. Such labels and leaders are to be placed on the rev layer.

Note: Generation thermal continues to use triangles to denote areas of revision where clouds interfere with the drawing content.

©2015 by PacifiCorp.

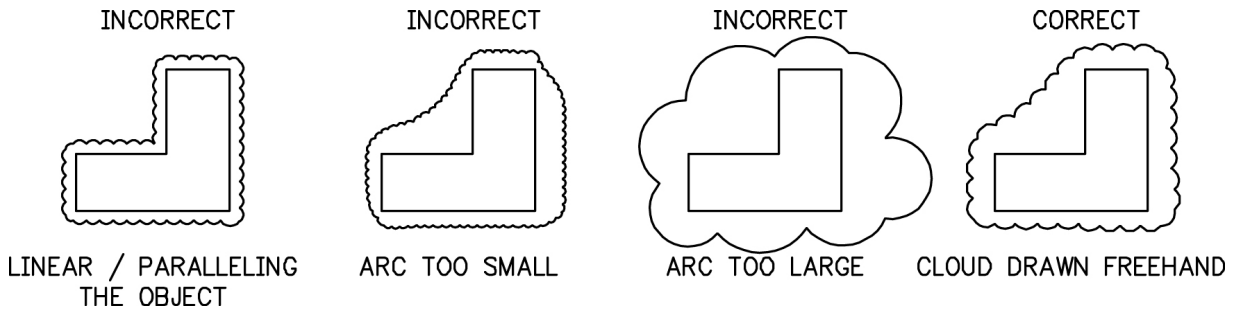

Figure 4—Revision Clouds

3. Updating with Revisions

3.1. Update Drawing Process

Changes may be made to drawings in two ways: 1) in project design prior to construction, or 2) in as-builts provided after construction. In project design, revision clouds shall be used to highlight changes on the drawings. In as-builts, construction revision clouds from all previous designs shall be removed.

If an existing drawing is being modified by 40 percent or more, it is recommended that the whole file be brought up to current drafting standards.

When creating or modifying drawings with content is derived from another drawing, the use of a "taken-in-part" note is used to create a reference. These notes are taken from the standard palette and tailored to the circumstance. The note is placed in the drawing that receives the content and the information in the note comes from the drawing that gives it up. For example:

1. THIS DRAWING TAKEN IN PART or TAKEN FROM DRAWING ____, REV ____, DATE____

    a. The drawing that the content was taken from would have some reference noted in the revision block as to what drawing the content was moved to. The content moved would have a cloud place around the area where the content was.

2. THIS DRAWING BASED ON or IN PART FROM DRAWING ___, REV ___, DATE___

    b. This would be used where a drawing type did not exist and a new one was created based on another drawing type.

This process is used when creating key sheets where the existing drawings are moved up one drawing number and a note is needed in each sheet following the key sheets.

3.2. Revisions and Versions

See Engineering Procedure 211, *Substation Engineering AutoCAD Review for External Consultants*, for further detail.

©2015 by PacifiCorp.

3.2.1. Versions

Versions are modifications that are being reviewed prior to issuing. The current revision will be incremented to the next revision number with a sequential alpha designation placed behind it for review purposes (e.g., 0A, 0B, or 1A, 1B, etc.). The alpha character shall be removed when the project is issued. These alpha/numeric notes shall also be placed near the clouded design change to delineate various design reviews. Place all text, leaders associated with the revision cloud on the rev layer with a text height of 3/32″. Versions are not used on communication drawings.

3.2.2. Revisions

When a design change becomes an approved revision, the version labels and associated revision blocks used for the versions shall be removed, leaving only one revision block. The final revision description will denote all the changes to the drawing. Revision numbers shall be numeric, whole-digit numbers. All current, finalized revision changes shall be clouded without a revision label.

Newly-created revision zero drawings do not have revision blocks and typically do not contain clouds. However, in certain circumstances (for example, revision zero manufacturer drawings with wiring being added) revision zero drawings shall contain revision clouds.

Each time a drawing has a new, approved change its revision number is incremented. The newest revision block shall appear beneath the previous revision block. If room at the bottom is needed, the oldest revision(s) shall be removed and the remaining revisions shifted upward such that the newest revision is always listed at the bottom.

One revision description line is preferred. Therefore, the descriptions should use abbreviations, if necessary, to accommodate the parameters of the first attribute field.

3.3. As-Builts

The marked-up as-builts are prepared by the field after construction is complete. The revision cloud shall not be removed until the marked-up as-builts are reviewed and approved by the engineer responsible for the work and the files have passed a drawing quality control check. After approval and quality control check, the revision clouds shall be removed and the file rev'd up. Additional changes without revision clouds may be added to the as-builts by an internal reviewer.

All construction notes are to be removed while all other remaining notes, legends, and layering or line types that indicate proposed shall be converted to existing.

Drawings in a construction package that have not been marked up by the field shall not be considered “as-built” or “rev'd up”.

All drawings shall be returned to the company's document management system in the native AutoCAD .dwg file format. The format shall be that of the same release of AutoCAD currently used by PacifiCorp. Pdf files will not be accepted in lieu of editable CAD files and are not to be issued as final drawings.

©2015 by PacifiCorp.

All final as-built drawings shall contain final approval signatures, both wet and electronic.

3.4. Update of Revision Block

Upon removing the revision cloud or inserting changes from the as-builts, the AutoCAD user shall update the provided revision block in the standard border template as described in 9A.2, Section 6.

3.5. Redlining Drawings

The originator of any drawing changes must provide the drafter/designer with a color-coded drawing and the name of a contact person if there are any questions. Details should include:

- Updated information in the revision block such as revision number, description of change, work order or project number
- Date of change
- Name of individual responsible for the change

The drafter/designer shall make the changes as requested and print the revised drawing. Upon completion, the drafter/designer will then return the marked-up drawing and a print of the revised drawing to the originator for review.

3.6. Color Code Key

Field markups in as-builts or in project design are to follow the below criteria.

Legible penmanship shall be used so the drafter can properly interpret the red lines. Eights that look like “B,” and fives that look like “S” are not acceptable.

When changes or corrections are being sketched on a drawing, the following color codes shall be used to assist the drafter:

- Additions: red
- Deletions: green
- Area checked, no change made: yellow
- Notes to drafter: blue (no black or pencil)

All changes to drawings must be clearly marked with the appropriate color code. This provides the drafter/designer with precise, detailed information regarding the changes requested.

3.7. Voiding & Superseding CAD or Image Files

See Engineering Handbook 9B.10 for generation thermal voiding and superseding procedures.

3.7.1. Voiding CAD Files

Void Stamps: Drawings being voided shall have the void stamp placed in the lower right-hand area of the drawing with the attributes completely filled in. If the drawing is being

©2015 by PacifiCorp.

superseded by another drawing, the drawing number(s) shall be referenced in the void stamp. The drawing that supersedes the voided drawing shall have a string of text placed along the lower right edge of the title block stating, for example, “THIS DRAWING SUPERSEDES DRAWING 123456.001, REV 3, DATE 6/11/03.” The revision number and revision date shall be that of the latest revision of the voided drawing.

If a drawing is partially superseding another drawing, the superseded note shall state this accordingly:

THIS DRAWING PARTIALLY SUPERSEDES DRAWING...

If the drawing is just being voided and not superseded, “N/A” shall be placed in the attribute field of the void stamp and the drawing shall not be rev'd up.

Transmission plans & profiles may be an exception to this rule; contact transmission document control for guidance.

Communications drawings do not use void stamps in the drawing file, but will be marked as void in the document management system.

Drawings can only be voided if the entire drawing series is voided. If the whole drawing series is being voided, the drawings are not updated or rev'd up and normal void/ superseding procedures are to be followed.

If the entire series is not voided, then the affected drawings will have the content removed, clouded, and a description placed in the revision block stating ”DRAWING LEFT BLANK FOR FUTURE USE, CONTENT MOVED TO 123456.XXX,” or if the series is not superseded or the content moved, the description shall read “DRAWING LEFT AS PLACE HOLDER FOR FUTURE USE.” The drawing is rev'd up and the title block updated to current standards for future use. As-builts will not have a cloud placed where the content was removed.

The 4th line (Attribute tag 6) of the title block should have "FUTURE USE" added to the existing nomenclature.

The new rev 0 drawing that replaces the one being voided or left as a place holder shall have a supersede note taken from the standard palette and placed in the lower right-hand corner of the drawing. The fields of the note shall have the following taken from the drawing that is being removed:

1. The full drawing number.
2. The revision number of the last revision of the voided or the blank drawing that contained the content before it was removed or voided, not the revision that it will become if left as a place holder, i.e., the note should not refer back to a blank place holder.
3. The date, unless it is a rev zero, is the date of the revision block, not the earlier date of the title block.

THIS DRAWING SUPERSEDES DRAWING ----, REV ----, DATE ----

©2015 by PacifiCorp.

A partial supersede note is placed if two or more drawings are superseding one drawing. The note shall read:

THIS DRAWING PARTIALLY SUPERSEDES DRAWING ----, REV ----, DATE----

A taken-in-part note is placed in drawings where the content is taken from an existing drawing and a portion of that existing drawing will continue to be used and not voided or left blank for future use.

THIS DRAWING TAKEN IN PART FROM DRAWING ----, REV ----, DATE ----

3.7.2. Voiding Image Files

To void a stand-alone image file, the file should be temporarily attached to a CAD file as a means of editing and saving the image file through Raster Design or other image editing software. In AutoCAD, attach the image, bring in the void stamp, and fill it in. Using raster design, use the command IVMERGE to merge the block into the image. Save the image file, not the CAD file, and detach it. Use this method only if the image is not already attached to a CAD file.

The following process is performed where a .tif image is part of a drawing series that cannot be voided. When the drawing content is either removed or transferred to another drawing, the drawing number is retained with the original title block history for future use as described below.

1. The title block information of the .tif image will be transferred to appropriate D size title block, and the new title block will be rev'd up and reserved for new drawing content.
2. The old legacy revision information from the .tif is not transferred over to the REV-D blocks. The drawing is rev'd up and not backward to a rev 0 drawing. The 4th line (attribute tag 6) of the title block should have “FUTURE USE” added to the existing nomenclature.
3. The revision block will read "DRAWING SUPERSEDED BY DRAWING(S) 123456.XXX or if not superseded, the description shall read ”DRAWING VOIDED AND LEFT AS PLACE HOLDER FOR FUTURE USE.”
4. The image is not attached, but a cloud is placed where the image would have been placed, representing that the content was removed.
5. The drawing that will supersede the old .tif will not inherit any of the old title block or revision history. It will be a new rev 0 drawing with only the drawing content transferred from the old drawing, and a supersede or partially taken note is placed in the lower right-hand corner of the drawing.

©2015 by PacifiCorp.

9A.5—Drawing Practices

1. Scope

This section details drawing practices required to provide uniformity and ease of use.

2. Quality and Neatness

All drawings created or modified for the company must be neat and professionally-drafted, clearly illustrating the necessary detail for the proposed construction or for producing final as-built drawings.

Some practices to abide by include:

- Object lines should meet at corners.
- Dimension extension line nodes should be snapped to the object being dimensioned. They shall not lay over the top of line types making the line type appear continuous, nor shall the node snap to the center of circles or arcs giving the appearance that the extension line is tangent to the circle or the dim gap is buried within the circle.
- All drawing content shall be shown within the paperspace border.
- Objects in modelspace should be drawn to the actual scale. Do not “free pick” object lines.
- Details drawn in modelspace that can be shown through a single viewport with the same scale shall be grouped together so they can be shown through a single viewport and not multiple viewports with the same scale. Viewports should not be drawn on a layer that plots so as to frame in the details. The detail frames, if used, should reside in modelspace with the details and be shown through the viewport.
- Use appropriate text justifications when placing or modifying text.
- Standard layers are to be used to depict line weights, linetypes, and color. All CAD entities are to be “bylayer” and are not to be modified by individually changing the linetype scale, color or linetype by entity.
- The drawing units are to be Architectural, with a minimum precision of 1/32″, and the insertion set to “inches.” The only exceptions to this rule are civil survey files, generation, and transmission files. The units of the survey file are to remain decimal. The units for these drawings shall have a length precision of 0.0000, an insertion scale in feet, angle type of deg/min/sec, and angle precision of 0d00’00”.
- New drawings shall use the company blocks placed in AutoCAD’s palette system.
- Legacy drawings saved as new drawings shall have the modified content converted to current CAD standards as required by 9A.7 *CAD Standards and Template Files*. In case-by-case scenarios, a 'taken from' or 'taken in part' note may need to be placed in the lower right-hand corner of the drawing stating where the drawing originated. This note shall relieve the burden of bringing certain portions of the drawing up to current standards, leaving important non-standard scenarios in place. The note shall follow the procedures in Handbook 9A.4, Section 3.7.1, *Voiding CAD Files*.

©2015 by PacifiCorp.

- New drawings shall not use certain existing non-standard entities within the drawing that are then copied to other areas for use in the new design.
- Drawing files shall not contain embedded VBA macros.

3. Drawing Scale

All modelspace objects are to be drawn to actual scale (1:1). In some instances it is necessary to plot the drawing in a manner that will allow users to scale off dimensions from a paper copy. Care should be taken when doing this to avoid confusion when copies or reductions of the original plot are made.

Table 5—Table of Drawing Scales (in feet)

Drawing		Text Factor	
Scale	Scale Factor	Size 0.09375	Size 0.125
1′=10′	10	0.9375	1.25
1′= 20′	20	1.875	2.5
1′=30′	30	2.8125	3.75
1′=40′	40	3.75	5
1′=50′	50	4.6875	6.25
1′=100′	100	9.375	12.5
1′=200′	200	18.75	25
1′=400′	400	37.5	50
1′=600′	600	56.25	75
1′=800′	800	75	100

©2015 by PacifiCorp.

Table 6—Table of Drawing Scales (in inches)

Drawing		Text Factor	
Scale	Scale Factor	Size 0.09375	Size 0.125
3/4″=1″	1.33	0.125	0.17
5/8″=1″	1.6	0.15	0.2
1/2″=1″	2	0.1875	0.25
3/8″=1″	2.67	0.25	0.33
1/4″=1″	4	0.375	0.5
1/8″=1″	8	0.75	1
1/16″=1″	16	1.5	2
1″=1″	1	0.09375	0.125
1/16″=1′	192	18	24
3/32″=1′	128	12	16
1/8″=1′	96	9	12
3/16″=1′	64	6	8
1/4″=1′	48	4.5	6
3/8″=1′	32	3	4
1/2″=1′	24	2.25	3
3/4″=1′	16	1.5	2
1″=1′	12	1.125	1.5
1–1/2″=1′	8	0.75	1
2″=1′	6	0.5625	0.75
3″=1′	4	0.375	0.5
1″=10′	120	11.25	15
1″=20′	240	22.5	30
1″=30′	360	33.75	45
1″=40′	480	45	60
1″=50′	600	56.25	75
1″=100′	1200	112.5	150
1″=200′	2400	225	300
1″=400′	4800	450	600
1″=600′	7200	675	900
1″=800′	9600	900	1200
1″=1000′	12000	1125	1500

Example: (for all text):
Text size (3/32″ text): Scale factor x 0.09375
Text size (1/8″ text): Scale factor x 0.125
Block Insertion Scale = 1 / Scale factor

©2015 by PacifiCorp.

4. Paperspace / Modelspace

Paperspace layouts shall be used in all power delivery drawings in the following manner, excluding generation thermal. All non-scalable entities such as one-lines, schematics, block and level diagrams, etc. shall be drawn in the paperspace layout tab with the border unless an image is being used. All entities associated with the image shall reside in modelspace. The following steps detail the procedures for utilizing paperspace / modelspace for scaled drawings requiring a viewport:

1. Draw the objects in modelspace at full scale using true measurements.
2. Typically, only one viewport is used and should be traced along the inner edge of the title block using the rectangular (not polygonal) viewport command. Viewports shall be placed on the DEFPOINTS layer.

   If needed, multiple viewports can be cut in the paperspace environment, as long as they fit within the 1:1 border. If multiple viewports are used with different scales, the scale of the detail is noted within the subtitle block and “AS NOTED” is placed in the title block. Details shown in one viewport shall have the scale noted in the title block and not beneath each detail.
3. Use the ZOOM command to precisely scale each view, or use the scale dropdown in the viewports toolbar to set the desired scale.
4. The layer properties manager can be used to set the appearance in a drawing with multiple viewports by freezing the layers within them.
5. All viewports shall be locked to avoid accidental changes.
6. Set the LTSCALE to .25 and PSLTSCALE to 1 to ensure that all line types plot the same in multiple viewports.
7. Fill out the title block and/or add the revision block, or other notes and legends. All notes, legends, and the reference drawing block shall be placed in the lower right-hand corner of the drawing in paperspace. Vertical lines of these notes and legends are to line up with each other. See Engineering Handbook Volume 9B for discipline-specific drafting standards related to the orientation of notes and legends.

5. Multiple Paperspace Layouts (Tabs) Within One File

See Engineering Handbook 9B.3, *Civil Drafting Standards*, regarding multiple paperspace layouts within one file.

6. External Reference Drawings

See Engineering Handbook Section 9B for discipline-specific XREF procedures.

©2015 by PacifiCorp.

6.1. XREF Naming

Below are examples of the suffixes used for XREF file names. XREFs are not permitted on transmission drawings.

New Numbering File Name	Legacy Numbering File Name
*.000.XT (topographic file)	*.A00.XT (topographic file)
*.000.XB (base file)	*.A00.XB (base file)
*.000.XE (electrical file)	*.A00.XE (electrical file)
*.000.XCH (control house file)	*.A00.XCH (control house file)
*.000.XG (grounding file)	*.A00.XG (grounding file)
*.000.XC (conduit file)	*.A00.XC (conduit file)
*.000.XL (landscape file)	*.A00.XL (landscape file)
*.000.XI (irrigation file)	*.A00.XI (irrigation file)
*.000.XEC (erosion control file)	*.A00.XEC (erosion control file)
*.000.UXE (future electrical use)	*.A00.UXE (future electrical use)
*.000.UXB (future base file)	*.A00.UXB (future base file)
*.000.UXC (future conduit file)	*.A00.UXC (future conduit file)

6.1.1. XT Topo Drawing Names (Civil Discipline)

The XT topo drawing name (i.e., the 5 or 6 digit number that precedes the suffix shown above) is the same number as the grading plan sheet file. This XT file contains surveyed land contours and features and base lines. This drawing is set to decimal rather than architectural units, and keeps its world coordinates. This file is based on civil survey data and is not to be modified without first consulting with the civil group.

With the use of Civil 3D, the XT file is not used.

The XT drawing is XREFed into the following sheet files:

- Grading Plan
- Topographic Survey
- Landscaping Plan

©2015 by PacifiCorp.

6.1.2. XB Base Drawing Names (Foundation Discipline)

The XB base drawing name (i.e., the 5 or 6 digit number that precedes the suffix shown above) is the same name as the foundation plan sheet file. This XB file contains existing and proposed property features (e.g., fence, road, property line, control house foot print, foundations, cable trench, ground mats, and base lines). This file is not to be created or modified without first consulting with the civil group.

The XB is XREFed into the following sheet files:

- General Plan
- Conduit & Cable Plan
- Grounding Plan
- Foundation Plan
- Fence Plan
- Landscaping Plan
- Grading Plan
- Plans & Elevations

6.1.3. XE Electrical Drawing Names (Electrical Discipline)

The XE electrical drawing name (i.e., the 5 or 6 digit number that precedes the suffix shown above) is the same name as the general plan sheet file. This XE file contains existing and proposed electrical facilities, bus layout, connections, and base lines.

The XE is XREFed into the following sheet files:

- General Plan
- Plans & Elevations

6.1.4. XCH Control House Drawing Names (Electrical Discipline)

The XCH control house drawing name (i.e., the 5 or 6 digit number that precedes the suffix shown above) is the same name as the control house arrangement and wiring sheet file. This file contains detailed control house facilities such as cable tray, lighting and equipment. AutoCAD's layer manager is used to toggle between cable tray, lighting plan, and equipment drawings.

6.1.5. XG Grounding Drawing Names (Electrical Discipline)

The XG grounding drawing name (i.e., the 5 or 6 digit number that precedes the suffix shown above) is the same drawing number as the grounding plan sheet file. This XG file contains only the grounding grid network without ground mats.

The XG is XREFed into the following sheet files:

- Grounding Plan

©2015 by PacifiCorp.

6.1.6. XC Conduit Drawing Names (Electrical Discipline)

The XC conduit drawing name (the 5 or 6 digit numbers that precedes the suffix shown above) is the same name as the conduit & cable plan sheet file.

The XC is XREF'ed into the following sheet files:

- Conduit Plan

6.1.7. XL Landscape File Names (Electrical Discipline)

The XL (landscape file) shall follow the same naming conventions as the landscape plan.

6.1.8. XEC Erosion Control Drawing Names (Civil Discipline)

The XEC erosion control drawing name (i.e., the 5 or 6 digit numbers that precedes the suffix shown above) if needed, is part of the grading plan. The file name should follow that naming convention. The XEC is a civil drawing, and in the title block, the third line document type will read “grading plan.” “Erosion control” is entered on the fourth line of the title block.

XREFs are created only to show the plan view of various portions of a site. Entities not to be included in an XREF are dimensions, text, details, elevations, section views, or anything specific to a sheet file.

If an electrical XREF file (XE) is to be created for an existing substation, and if there were an existing general plan of 12345A01, the new XE would follow the name of the old legacy number of 12345A00.XE, not the new six digit naming convention of 123456.000.XE.

6.2. Building the XREF File

All XREF files, except the .XCH, are to contain vertical and horizontal baselines with the intersection of these baselines placed at 0,0. All XREF files will now have the CORP-Z block replaced with the appropriate, discipline-specific D-size title block, and undergo the same placement and revision procedure as any other sheet file.

The D-size title block is placed in paperspace and filled in just as the sheet files. The scale shall be 1:1 and the sheet number shall be "1 OF 1."

The document type will be “X-REF” and the fourth line, (attribute tag #6) will describe the type of base file.

The XREF file will only be rev’d up if the file is checked out for modifications. All revision clouds will be shown in the sheet files and not in the XREF file.

To keep from twisting the views of the viewports of the sheet files we do not keep the real world coordinate of all XREFs with the exception of the XT. The XT shall remain at real world coordinates and the baselines are to coincide with the baselines of the other drawings within the yard.

Dimensions and text are not to be used within XREFs. These entities are placed within the individual sheet files.

©2015 by PacifiCorp.

When establishing baselines in new facilities, care should be taken so as to not cross through any existing or proposed foundations or equipment. If moving foundations and equipment during the design phase of the project is necessary, and in doing that, they cross through any baselines, then adjusting the lines becomes necessary. The adjustment of the baselines in one file requires the adjustment in all the other files. The drafter will then need to move the entire drawing back to 0,0 via the intersection of the two baselines. The AutoCAD command BASE is not to be used in lieu of repositioning the entire file. Be aware of any layers that are locked or frozen before moving all.

If the XREF files exist with baselines, the baselines may not be moved even if they interfere with new design. This is due to these baselines being set with a marker in the yard.

If a new XREF is being created from existing drawings where the baselines are not present and a field-check or survey cannot be performed, the lower left-hand corner of the yard or fence corner shall be at 0,0.

6.3. XREFs in Sheet Files

All XREFs are to be placed in modelspace on the XREF layer at a coordinate of 0,0, attached with the NOPATH option. The XREF files are not to be moved, aligned, or rotated off this coordinate. Use DVIEW and TWIST, or ROT, to orient the viewport. An exception to this is when the XB is aligned to the XT in its real-world coordinate. The baseline layers from the multiple attached XREFs are frozen in all but one XREF so as not to have overlapping line types.

Attachments are to be one level deep (i.e., no nesting). Building an XREF by attaching another to it, and then attaching that file to a sheet file creates a nesting situation. To alleviate this, use the overlay option when one XREF file is attached within another.

XREF files are not to be bound to the sheet file and exploded or inserted as a block rather than attaching as an XREF.

6.4. Revising XREFs

When modifications are made to an XREF, it shall be rev'd up using a revision block with a description of what was modified. If modifications are made and the title block is not “rev'd-up,” the file will not be uploaded to the company’s Document Management system.

6.5. Unacceptable Attachments

- Sheet files into other sheet files
- Blocks from block libraries
- Details

©2015 by PacifiCorp.

7. Hybrid Drawings

7.1. Attached Raster Drawings

The purpose of attached raster images is to reduce drafting time and eliminate redrafting of existing manual drawings. Rasters should only be used when it is not feasible to produce a full CAD re-draw. Raster images should always be attached in modelspace, on layer “IMAGE,”, color 7, with “retain path” unchecked, transparency set to ON, and frame turned OFF. Any CAD entities added to the image are to be located in modelspace.

Attached raster images may be used when the revision being performed affects 30-60% of the drawing. However, the entire drawing may be redrawn in AutoCAD at the drafter/designer’s discretion instead. Remember, when creating composites, the goal is to work toward a fully-vectorized drawing. The only type of raster edit that should be performed is erasing. Eventually, all drawings will be converted to AutoCAD. The drafter should, if time and budget allow, convert raster images whenever possible.

Before the raster image may be used, it must be scaled, despeckled, deskewed, and otherwise prepared to ensure that all portions are legible. Areas that cannot be successfully repaired by such methods shall be redrawn in AutoCAD.

Only the pertinent title block information is transferred from the image to the current title block. The revision is incremented to the next revision, but the previous revision descriptions are not transferred, nor are they retained in the image file. If any of the existing title block nomenclature is incorrect, it is to be corrected to standard. See Vol. 9B 3.1.1 regarding nomenclature revision.

Raster images may only be linked to drawings using AutoCAD. The company’s preferred raster editing software is Raster Design. However, any image-editing software capable of saving the file as a stripped CCITTG4 compressed “tif” image is acceptable.

Note: Raster Design versions later than 2010 have a known issue with the degradation of the image after modification and a save is performed: therefore, these versions should be avoided by using other image editing software or version 2010 should be used for the modifications.

Raster images may be attached to XREFs and be referenced as part of the XREF into multiple sheet files. In this case, the raster image file name shall match the XREF file name (e.g., 123456.000.XB.dwg = 123456.000.XB.tif). In cases where it is necessary to use multiple images to assemble one XREF, those images shall be combined into one image with a consistent DPI density across all images. The command IDENSITY in AutoDesk’s raster design can be used to accomplish this by setting the pixels/inch density to a higher number (e.g., from 300 to 600).

Images used in tabbed drawings and shown through multiple viewports must be combined into one image file as described above. The one attached image shall not be copied to other areas within modelspace and shown through multiple viewports. Raster Design is used to reposition or copy different details within a single image frame to show them in drawings with multiple layouts.

©2015 by PacifiCorp.

Only pixelated .tif images that can be edited with Raster Design shall be attached. File types such as .bmp or .jpg files are not to be attached to the AutoCAD drawing file.

Attached raster images may only be referenced to one parent. If more than one parent drawing uses the raster image, and the image is not inordinately large, copies of the image file will be referenced to each parent. The raster file name and the CAD file name must be the same (e.g., 123456.001.dwg = 123456.001.tif or 12345A01.dwg = 12345A01.tif).

If an image file name is the generic scanned file name, such as 01390073.tif, it shall be renamed to the correct document number that will match the CAD file. This shall be done even if the image is not attached to a CAD file and is being voided. If the image is attached to a CAD file and needs to be renamed, the image will need to be re-pathed or reattached.

7.2. Compound Externally-Attached Raster Drawings

Compound raster drawings are created when it is desirable to provide a topological or other land-base image behind the actual drawing, and there is no intent to vectorize this image in the future. This normally occurs only with transmission lines, although other special cases may be defined. Multiple layouts may be used to fit raster images across the file.

8. Plotter Setup - Line Color to Line Width Assignment

All AutoCAD drawings shall use the PacifiCorp.ctb color table file for plotting and line weight control. The company's color table is designed for full-size plots (i.e., D-size); therefore, plotting on smaller paper sizes may require toggling the linetype scaling.

Below is a table of modified line widths and screening. All other colors of AutoCAD's 250 colors are a standard width of .012 with screening set to 100 percent. No modifications to the company's color table file are permitted. Colors not shown in Table 7 are a standard weight of 0.0120 with no screening.

©2015 by PacifiCorp.

Table 7—Line Color to Line Width Assignment

CTB COLOR TABLE FILE		
NO.	WEIGHT	SCREENING %
1	0.0220	
2	0.0120	
3	0.0071	
4	0.0280	
5	0.0120	
6	0.0120	
7	0.0120	
8	0.0120	20
9	0.0059	
10	0.0177	
11	0.0197	
13	0.005	
15	0.0071	70
30	0.0236	
32	0.0071	
34	0.0157	
41	0.0098	
52	0.0098	
54	0.0098	
61	0.0079	
63	0.0079	
140	0.0220	
151	0.0157	
190	0.0138	
201	0.0050	10
211	0.0138	
213	0.0059	
215	0.0059	
230	0.0256	
242	0.0050	30
251		15
252		25
253		35
254		45

9. Exiting a Drawing

When exiting a drawing, use the following procedure to ensure that the drawing is in a clean state for other users and that the drawing file size has been reduced to saving disk space.

1. Before exiting a drawing, the user should execute a ZOOM EXTENTS command to display all drawing entities in both paper and modelspace.
2. If there are any entities outside of the border other than the date stamp, they should be erased.
3. Use purge command to clean up all unwanted, unreferenced data.

©2015 by PacifiCorp.

4. Set the current layer to “0”.
5. Cursor is to be current in paperspace and not within the viewport.
6. All loose entities, found by entering Ctrl-A and shift to deselect all visible entities, either in paperspace or modelspace shall be deleted as with any entities not shown through a viewport.

10. SNAP, OSNAP, and ORTHO Settings

These settings should be used to ensure alignment, closure, and accuracy of lines or objects created by AutoCAD.

The tools used to control drawing alignment and accuracy are SNAP, OSNAP, and ORTHO:

- If SNAP is used to accurately place lines, blocks, and text in a drawing, it should be set to a minimum value of .03125 inches or (1/32") and must be in multiples of .03125 inches multiplied by the scale factor.
- OSNAP allows users to quickly and easily find the most commonly-used pick points on a drawing object and to ensure that lines, arcs, and circles meet accurately.
- ORTHO is used to create or align drawings, lines, and text that are horizontal or vertical.

11. Associative Dimensioning

11.1. General

Dimensions are to be associative or real unless they are being used for a note or text string. (Stick-building dimensions by assembling lines, text, and arrowheads or architectural tics is prohibited.) This will ensure that the dimensioning is consistent and dynamic throughout the drawing. DIM styles are obtained via the appropriate discipline’s tool palette, or through the appropriate template files found in the AutoCAD Support\templates folder.

Place dimensioning on a dim layer, color bylayer (color 3). The dim style naming convention should be associated with the scale factor. For example, if the scale factor is 48, then the dim style used should be 48, with the viewport scale set to 48.

No modification of existing dim styles or the creation of new styles is permitted (i.e.: modifying existing style 48 (1/4″ = 1′0″) to accommodate a change of scale in the viewport from a 48 to 32 (3/8″ = 1′0″) is not acceptable drafting practice). The style of 48 is to be replaced with the style of 32. The dim style STANDARD is not one that should be used or tailored to fit the scale of the drawing.

Where the STANDARD style is in use, it shall be updated to the correct style based on the scale of the drawing.

11.2. Guidelines for Associative Dimensioning

When dimension arrowheads of continuous linear dimensions are forced outside, the dimension is to be offset from the other dimensions so as not to have overlapping arrowheads. The text of the dimension is then moved and centered (not above) between either side of the outward dimension. Additional guidelines for dimensioning variables are outlined below:

©2015 by PacifiCorp.

- Layer: DIM, color 3, line type continuous. (All bylayer)
- Location of text is always above or off to the side and centered. Never below or centered on the dimension line.
- Be sure variable DIMASO is set to on (turns associative dimensioning on).
- Do not override dimension values. The exception to this is the addition of a note or text string within the dimension.
- Variable DIMASSOC should be set to the two (2) to keep dimensions linked to their objects.

11.3. Leaders

All leaders (QLEADER or MLEADERS) shall be associative, and drawn using the dimension style matching the scale factor of the viewport. Leaders should be drawn with no more than three points (i.e., two line segments). Leaders associated to text are placed on the same layer as the text.

When using QLEADERS, the operator should escape out of the “place text” option so the text and the leader can be oriented correctly.

11.4. Drawing Units

See Engineering Handbook 9B.10 for discipline-specific unit types.

Drawing units are to be architectural with a minimum precision of 1/32" and the insertion set to inches. An exception to this is the civil survey file, grading plan, and transmission drawings where the units are decimal with an insertion scale of feet.

12. Line-Type Scale

The LTSCALE command sets the scale factor to be applied to all line types within the drawing. A global line–type scale factor is provided for each new drawing with a default value of 1.0. To maintain a consistent line type appearance on drawings the line–type scale (LTSCALE) is set at 0.25. The PSLTSCALE SETVAR should be set to 1.

13. North Arrows

North arrows are to be placed in the upper right hand corner of the title block in paperspace. When working with twisted views or changing the rotation in the viewport, be sure that the north arrow is also rotated correctly. In a twisted viewport (likely in the grading plan), where the survey file is kept in its real-world coordinate, the north arrow is aligned with the crosshairs with the UCS set to WORLD. The north arrow is then brought to the paperspace environment via CHSPACE and the viewport is locked.

The orientation of the north arrow should be true north and not what is referred to as substation north.

An exception to this is that transmission and generation thermal will use Plant North and the north arrow is placed in modelspace.

©2015 by PacifiCorp.

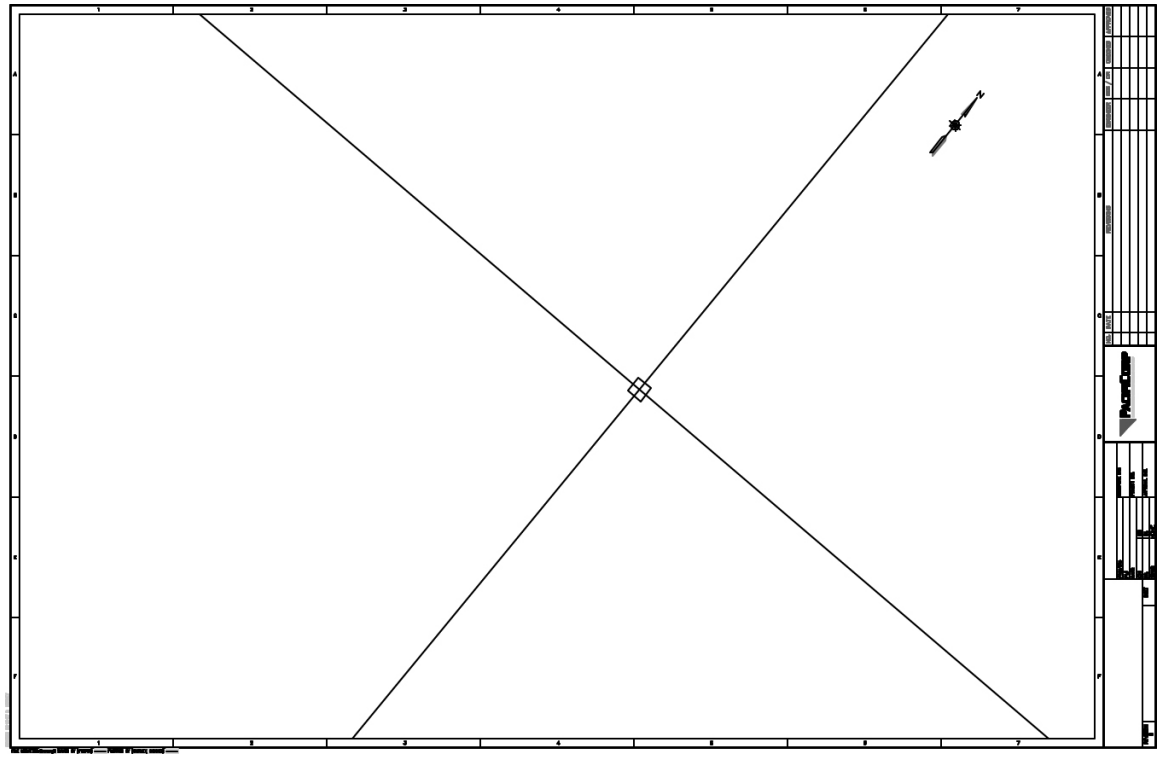

Figure 5—North Arrow With Twisted Viewport

North arrows are used in the following sheet files which show the plan views of the yard. Such sheet files will also use a scale bar:

- General Plan
- Conduit & Cable Plan
- Grounding Plan
- Foundation Plan
- Fence Plan
- Landscaping Plan
- Grading Plan
- Plans & Elevations
- One-Line Diagram (no scale bar)
- Landscape Plan
- Erosion Control Plan

14. Scale Bars

Architectural scale bars found on the Standard palette and are to be placed in the lower middle to right-hand area of the drawing. Decimal scale bars are found on the civil palette, and are to be

©2015 by PacifiCorp.

used in the civil drawings that require a scale bar. The grading plan drawings using decimal units shall use the decimal units scale bars, i.e., 1″ = 20′ and not 1″ = 20′-0″.

Transmission drawings do not use scale bars.

The creation of non-standard scale bars in which field personnel cannot place a standard engineering scale to, such as 1/12″ = 1′-0″ is prohibited.

15. Manufacturer Drawings

When placing manufacturer drawings within company title blocks:

Using the appropriate standard D-size title block, place the manufacturer's drawing into modelspace by copying/pasting from the original file then show it through a viewport. The viewport is given a scale that allows the entire manufacturer's drawing to be shown with the text plotting at or near a height of 3/32". If the drawing is too large to accomplish this, then zoom extents and reduce the scale, leaving a margin of approximately 1" between the company's title block and the manufacturer's title block.

Manufacturer files are not to be opened and "saved-as" a project file. These files are often developed with software other than an Autodesk product, or come from other countries, which can bring in hidden issues that cannot be purged out.

In the Layer Properties Manager, group any layers that are using the color cyan, red, #30, #140, and #230, and change those colors to white so they will not plot heavy. Change any entity that has the colors forced to those colors, back to color bylayer.

If adding any wiring or other information to the manufacturer's file, use company drafting standards. These modifications should have revision clouds even on revision zero drawings.

16. Vicinity Maps

1. Vicinity maps are to be created and modeled after the example vicinity map block found on the standard palette.
2. The map should not be an attached image such as a .bmp or .jpg. It may be temporarily attached, then duplicated by using the entities found within the template block.
3. The new vicinity map is then made into a block so the audit routine will not recognize the forced layer properties. The block is then placed on the vicinity map layer.

©2015 by PacifiCorp.

9A.6—Block Usage and Development

1. Scope

This section of the Engineering Handbook contains a general description of block usage and development.

Blocks are no longer kept as individual CAD files, but are categorized by type and placed within various files where they can be brought in using AutoCAD's design center or from shared palettes (palettes being the preferred method). Blocks provided by the company shall not have the properties altered without approval.

2. General Guidelines

All entities that reside in blocks are to be developed on layer 0 using company standards (i.e., text style, height, and justification). If a block is intended to be placed on the steel layer, then all entities considered to be steel within the block are to be on layer 0, color and line type bylayer. Other entities such as hidden lines, center lines, holes, or fittings can be on their respective layers. The attributes and text within a block, even though on layer 0, should be forced to color 7 (white), and not placed on the text layer, so as to always appear white when placed on various layers.

Blocks should be created with insertion point at a position where it will be useful in snapping the block to neighboring objects.

The command MINSERT shall not be used when placing blocks.

3. Insertion Point

The insertion point is the reference point for subsequent insertions of the block. It is also the point about which the block can be rotated during insertion. When inserted, blocks are to be placed on designated layers and should not be xclipped.

©2015 by PacifiCorp.

9A.7—CAD Standards and Template Files

1. Standard Files

The company has compiled hundreds of standard files that are available upon request. Many of these files were drafted years ago and should be brought up to current drafting standards, including:

- Current title block and its proper placement
- Correct dimension styles
- Correct text styles, uniform heights, and justifications
- Drawing units
- Layers
- Correct LTSCALEs and PSLTSCALEs
- Entities bylayer and not forced to a color and line type
- Entities in their proper paperspace or modelspace environment.

To ensure the above are within the guidelines of the Volume 9A, use the following procedures in an effort to provide the company with clean CAD files:

1. Use AutoCAD's LAYER WALK to ensure entities are on their proper layers.
2. Use company-provided routines to correct and standardize CAD files. See company engineering procedure 240, *AutoCAD BAD (Batch Drawing Audit) Procedure* for the use of audit tools.

2. Template Files

Template files are available that contain standard settings of layers, text and dimension styles, units, and various title blocks used by the company. These files are discipline-specific for substation/civil, communications, generation, and transmission and are located within the AutoCAD Support/Templates folder.

3. Checking Out Files for Modification

Active drawings intended to be modified are to be checked out of Document Manager. Modifications shall not be made to copies if original drawings are not available for checkout.

4. Final Issue For Construction (IFC) Procedures

The following requirements apply to files returned by consultants:

1. All internal and external modifications to company -owned drawings shall adhere to Engineering Handbook Volume 9, *Computer-Aided Design* and all other supplemental procedural documents or discipline-specific publications.

©2015 by PacifiCorp.

2. Drawings to be modified shall be legitimately checked out of DM. Modifications made to copies of drawings, or to drawings from private libraries not obtained from a document control employee is prohibited.
3. All internal and external drafters, designers, or checkers will be responsible for ensuring that CAD standards are being met, prior to submitting to the company, at all review stages.
4. Outside firms shall be pre-approved vendors. They shall insure that all CAD files are submitted to the company at each step in the review process. See item 5 below.
5. To ensure CAD standards are adhered to for company-owned CAD files, review procedures are outlined in company Procedure 211, *Substation Engineering AutoCAD Review for External Consultants*. This publication is referenced in EPC Exhibit A, Section 1 General.
6. The final issuing dates on new rev zero title blocks and revision blocks are to be the same on all drawings being signed and issued. These dates should be on or around 10 days from the issue date. This can be accomplished using the batch routine provided by the company. The Void stamp should also have matching dates. Please contact PacifiCorp AutoCAD Technical Support at (503) 331-4392 or (503) 813-6615.
7. Upon delivery to the company's document control, CAD files associated with AutoCAD's sheet sets and standards checks are to be disassociated.
8. It is advisable to use AutoCAD's ETRANSMIT to ensure all files are bundled together when returning a completed project for final issue. This will minimize missing XREF and image attachments.
9. Files that are returned, checked in, and issued are then available for others to check out for modification. Backup copies shall not be retained in private libraries for future use.
10. Project files for external engineering are re-checked out to consultants to ensure that the files are available for as-builting. These files, not backup copies, must be used. Minor corrections are occasionally made to the files upon check in; those changes are lost when as-built modifications are made to files from private libraries.

©2015 by PacifiCorp.

5. CII (Critical Infrastructure Information) Drawings or Documents

See separate CII Procedure V1.05.

6. Handbook Issuing Department

The engineering standards and technical services department of the company published this document. Questions regarding editing, revision history and document output may be directed to the lead editor at eampub@pacificorp.com. Technical questions and comments may be directed to Dennis Hurley, substation engineering, (503) 331-4392. This handbook document shall be used and duplicated only in support of company projects.

©2015 by PacifiCorp.

This page is left blank intentionally.

©2015 by PacifiCorp.

9B.1—Transmission

1. Scope

This section of the company's Engineering Handbook provides transmission-specific drafting standards for plan and profile drawings. Other types of transmission drawings are not covered. For examples of the elements described in this document, refer to the transmission sample plan and profile drawing. The sample plan and profile can be obtained internally via the AutoCAD support directory at *J:\Shared Data\AutoCad Support\TEMPLATES\transmission*, or externally at https://pcorpstandards.com/www/w-CAD.html.

For an overview of general company drafting standards, see Engineering Handbook volume 9A, *Computer-Aided Design*. For details on company transmission document control practices, see Procedure 097, *Transmission Documentation*.

2. PLS-CADD Export

Plan and profiles created from PLS-CADD shall be exported to AutoCAD and inserted into an existing plan and profile or in a new plan and profile using the CORPD-TRAN.dwt template border.

3. General Revision Practices

If more than ¾ of a raster image needs to be revised then redraw the entire file in AutoCAD.

Whenever possible, the plan and profile views shall be on the same sheet with the profile portion located above the plan view. If there are more than four breaks in the profile, it is appropriate to have the plan and profile views on separate pages. When plan and profile drawings are on separate pages, the profile sheet shall have an “A” suffix for the sheet number, for example, “12345T01” for the plan and “12345T01A” for the profile.

4. Layer Control

a. Use only standard layers that come in the CORPD-TRAN.dwt template file. See Table 1 for a list of standard layers for plan and profile drawings.

b. If a new layer seems appropriate, it must be approved by the transmission group. Submit new layers for consideration with the following naming convention: “PRO-XXXXX” for profile view layers or “PL-XXXXX” for plan view layers.

c. Assign color and line type by layer for all lines, objects, blocks, and text.

d. Before a drawing is sent to document control to be checked-in, it should be purged of all non-standard entities and standard entities that are not in use. Purge all unused layout tabs

Printed versions of this handbook document may be out of date. Please consult the online engineering handbook for the most recent version.
©2015 by PacifiCorp Engineering Publications.

Table 1—Plan & Profile Layers

NAME	COLOR SETTINGS		LINETYPE		USE
	COLOR	WIDTH	LINETYPE	SAMPLE LINE	
0	(7) WHITE	.012"	CONTINUOUS		BLOCKS
DEFPOINTS	(7) WHITE	.012"	CONTINUOUS	THIS LAYER IS SET NOT TO PLOT	DEFPOINTS
DIM	(3) GREEN	.0071"	CONTINUOUS		DIMENSION LINES & DIMENSION TEXT
IMAGE	(7) WHITE	.012"	CONTINUOUS		RASTER IMAGES
LOCKED Tran-Stamp	(7) WHITE	.012"	CONTINUOUS		LOCALITY NUMBER, LINE CODE, DRAWING #
PHASING	(7) WHITE	.012"	CONTINUOUS		PHASING CONFIGURATION
PL-40-SEC	(3) GREEN	.0071"	TFORTY		FORTY ACRE LINES
PL-BUILDING	(5) BLUE	.012"	CONTINUOUS		BUILDINGS
PL-CL-STA	(7) WHITE	.012"	CONTINUOUS		HIGHWAY CENTERLINE STATION TICKS & TEXT
PL-COND1	(1) RED	.022"	CONTINUOUS		MAIN TRANSMISSION LINE ROUTE
PL-COND2	211	.0138"	CONTINUOUS		OTHER TRANSMISSION & DISTRIBUTION LINES
PL-COUNTY LINE	(7) WHITE	.012"	TCENTER		COUNTY LINE
PL-CURB & GUTTER	9	.0059"	CONTINUOUS		CURB & GUTTER
PL-FENCE	(3) GREEN	.0071"	TFENCE		FENCE
PL-GUY	(7) WHITE	.012"	CONTINUOUS		DOWN GUYS
PL-N-ARROW	(7) WHITE	.012"	CONTINUOUS		NORTH ARROW
PL-OTHER UTILITIES	190	.013"	CONTINUOUS		OTHER UTILITY FACILITIES
PL-OWNER	(7) WHITE	.012"	CONTINUOUS		OWNERSHIP
PL-PIPELINE	(3) GREEN	.0071"	TPIPE		OWNERSHIP
PL-POLE	(7) WHITE	.012"	CONTINUOUS		TRANSMISSION MAIN LINE ROUTE POLES
PL-PROPERTY LINE	(3) GREEN	.0071"	TDASH		PROPERTY LINES
PL-QU-SEC	(7) WHITE	.012"	TQUARTER		QUARTER SECTION LINES
PL-RAILROAD	(7) WHITE	.012"	TRACKS		RAILROAD TRACKS
PL-ROAD-DIRT	9	.0059"	TDASH-		EDGE OF DIRT ROADS
PL-ROAD-PAVED	9	.0059"	CONTINUOUS		EDGE OF PAVED ROADS
PL-RWLINE	(3) GREEN	.0071"	TPHANTOM		RIGHT-OF-WAY LINES
PL-SECTION	(7) WHITE	.012"	CONTINUOUS		SECTION LINES
PL-SIDEWALK & DRIVEWAY	9	.0059"	CONTINUOUS		SIDEWALKS & DRIVEWAYS
PL-STATE LINE	(4) CYAN	.028"	TPHANTOM2		STATE LINE
PL-TOPO	(3) GREEN	.0071"	CONTINUOUS		MISC TOPO
PL-VEGETATION	(3) GREEN	.0071"	CONTINUOUS		TREES, BUSHES, GRAIN FIELDS
PL-WATER FEATURES	(5) BLUE	.012"	TCREEK2		LAKES, RIVERS, CREEKS, PONDS, SWAMPS
PRO-ARM	(7) WHITE	.012"	CONTINUOUS	THIS LAYER IS SET NOT TO PLOT	ATTACHMENT POINT ON POLES IN PROFILE
PRO-CLEARANCE	(7) WHITE	.012"	TPHANTOM		GROUND CLEARANCE LINE
PRO-DAMPER	(7) WHITE	.012"	CONTINUOS		DOGBONE AND SPIRAL VIBRATION DAMPERS
PRO-GRID	250	.0071"	TDOT		PROFILE MINOR GRID LINES
PRO-GRND-CEN	(1) RED	.022"	CONTINUOUS		CENTERLINE GROUND ELEVATION
PRO-GRND-LT	(3) GREEN	.0071"	TDASH		LEFT SIDE SHOT GROUND ELEVATION
PRO-GRND-RT	(3) GREEN	.0071"	TDASHDOT		RIGHT SIDE SHOT GROUND ELEVATION
PRO-MILE-MARKER	(7) WHITE	.012"	CONTINUOUS		MILES FROM STARTING POINT
PRO-POLE	(7) WHITE	.012"	CONTINUOUS		POLES IN PROFILE
PRO-SAG-DIST	(7) WHITE	.012"	TDASH2		DISTRIBUTION CONDUCTOR SAG
PRO-SAG-NEUT	(7) WHITE	.012"	TDASH		NEUTRAL DISTRIBUTION SAG
PRO-SAG-STATIC	(3) GREEN	.0071"	CONTINUOUS		STATIC OR FIBER OPTIC LINE SAG
PRO-SAG-TRANS	(5) BLUE	.012"	CONTINUOUS		TRANSMISSION CONDUCTOR SAG
PRO-STATION	(7) WHITE	.012"	CONTINUOUS		POLE STATION LINE
PRO-VERT_INSUL	(7) WHITE	.012"	CONTINUOUS		POLE TOP INSULATOR LOCATION
PRO-XING	(1) WHITE	.012"	CONTINUOUS		WIRE CROSSINGS IN PROFILE
REV	(1) RED	.022"	CONTINUOUS		REVISION NOTE & REVISION CLOUD
TEXT	(7) WHITE	.012"	CONTINUOUS		TEXT
TEXT-LRG	(7) WHITE	.012"	CONTINUOUS		LARGE TEXT
TEXT-SM	(7) WHITE	.0071"	CONTINUOUS		SMALL TEXT
VPORT	8	.012"	CONTINUOUS	THIS LAYER IS SET NOT TO PLOT	VIEW PORTS
VPORT BOUNDARY	253	.012"	TDASH	THIS LAYER IS SET NOT TO PLOT	SHOWS PSPACE VPORT BOUNDARY IN MSPACE
XREF	(7) WHITE	.012"	CONTINUOUS		EXTERNAL REFERENCE DRAWINGS

Printed versions of this handbook document may be out of date. Please consult the online engineering handbook for the most recent version.
©2015 by PacifiCorp Engineering Publications.

5. Scale and Drawing Size

a. For urban areas, utilize a scale of 1"=200' horizontal, 1"=20' vertical. For rural areas, utilize a scale of 1"=400' horizontal, 1"=40' vertical.

b. Draw plans and profiles full-size in model space and scale via viewport in paper space. Omit any excess entities in model space that are not being viewed in paper space.

c. Lock the viewport after it has been scaled and positioned correctly.

d. Use only the standard dimension styles that come in the CORPD-TRAN.dwt template file. See Table 2 for a list of standard dimension styles for plan and profile drawings. For example, when using a scale of 1"=400' horizontal, use dimension style “400.”

e. Set Ltscale at <0.25>, PSLtscale at <1>, and Plinegen at <1>.

f. Save files in paper space zoomed to border extents with the zero layer active.

Table 2—Text and Dimension Styles

			DIMENSION	TEXT					
DRAWING	HORIZONTAL	SCALE		0.09375		0.125		SAMPLE	
ENVIRONMENT	SCALE	FACTOR	STYLE	STYLE	HEIGHT	STYLE	HEIGHT	TEXT-LRG	TEXT-SM
PAPER SPACE	1"=1"	1	1	T1S	0.09375	T1L	0.125	TEXT-123	TEXT-123
MODEL SPACE	1"=50'	50	50	T50S	4.6875	T50L	6.25	OTHER SETTINGS PSLTSCALE = "1" LTSCALE = .25 PLINEGEN = "1"	
MODEL SPACE	1"=100'	100	100	T100S	9.375	T100L	12.50		
MODEL SPACE	1"=200'	200	200	T200S	18.75	T200L	25		
MODEL SPACE	1"=400'	400	400	T400S	37.5	T400L	50		
MODEL SPACE	1"=600'	600	600	T600S	56.25	T600L	75		

6. Text Style

a. Use only the standard text styles that come in the CORPD-TRAN.dwt template file. See Table 2 for a list of standard text styles for plan and profile drawings. For example, when using a scale of 1"=400' horizontal, use text style T400L for large or T400S for small text.

b. When plotted to scale, large text shall be ⅛-inch and small text shall be $^{3}/_{32}$-inch.

7. Blocks and Tables

7.1. Standard Abbreviation Block

Locate the standard abbreviation block along the bottom of the border and to the right of the structure and conductor tables in paper space. Do not explode this block.

Printed versions of this handbook document may be out of date. Please consult the online engineering handbook for the most recent version.
©2015 by PacifiCorp Engineering Publications.

7.2. Structure Table

a. Locate the structure table in the lower left hand corner of the border in paper space.

b. List all the structure types used on the sheet being viewed, plus any other associated drawings such as framing, foundation, load tree, criteria, and/or manufacturer drawings.

c. The structure table may be exploded if necessary to expand the number of lines, but the attributed text within the tables shall not be exploded.

7.3. Conductor Table

a. Locate the conductor table along the bottom of the border and to the right of the structure table in paper space.

b. Fill in the conductor information as shown on the sample plan and profile drawing.

c. The conductor table may be exploded if necessary to expand the number of lines, but the attributed text within the tables shall not be exploded.

BLOCK	BLOCK NAME	LAYER
CONDUCTOR TABLE	CHART–C	CREATED IN LAYER "0"

CONDUCTOR INFORMATION									
		DISPLAYED				DESIGN			
SECTION	CONDUCTOR TYPE	TEMP. °F	WEIGHT (lb/ft)	FINAL TENSION	ICE (in)	RULING SPAN	MWT (lbs)	NESC LOADING	FINAL SAG CHART NO.

BLOCK	BLOCK NAME	LAYER
STRUCTURE TABLE	CHART–S	CREATED IN LAYER "0"

STRUCTURE INFORMATION				
STRUCTURE TYPE	FRAMING DRAWING NO.	STEEL STRUCTURE DRAWINGS		
		FOUNDATION	OTHER	WORK ORDER

BLOCK	BLOCK NAME	LAYER
STANDARD ABBREVIATIONS	STANDARD ABBREVIATIONS	CREATED IN LAYER "0"

STANDARD ABBREVIATIONS

SG – SIDE GUY(S)
SPG – SPAN GUY(S)
HG – HEAD GUY(S)
BG – BACK GUY(S)
LD – HORIZONTAL GUY LEAD(S) (MEASURED FROM SURVEY CENTERLINE TO ANCHOR ROD EYE)
SI – STRUT INSULATOR
☐ – FIBER SPLICE POINT

A – ANCHOR(S)
(24D) – 24" DISK
(30D) – 30" DISK
(SA) – SCREW ANCHOR
(RA) – ROCK ANCHOR
CL – CLASS OF POLE
ø – PHASE
L,C,R – LEFT, CENTER, RIGHT
⊥ – DAMPER: DOGBONE
∧∧ – DAMPER: SPIRAL VIBRATION

Figure 1—Standard Conductor Table, Structure Table, and Abbreviation Block

8. Profile Structure Text

The text above the structure shall include the following information, in the order shown:

a. Structure height

b. Type

c. Class (for wood structures) or steel (for steel structures); (see Examples 1 and 2 below)

Printed versions of this handbook document may be out of date. Please consult the online engineering handbook for the most recent version.
©2015 by PacifiCorp Engineering Publications.

d. Switch number (switch structures only)

e. Cross braces

f. Number of guys. List guying as number of guys to number of anchors, plus direction (for example, “3BG-2A 45' 65' LD” for three back guys going backwards on station to two anchors; “3HG” means three head guys)

g. Number of anchors

h. Anchor type

i. Guy lead distance (see example 1 below.) List lead length after anchors. The lead is the horizontal distance from pole base to anchor eye.

j. Structure or foundation depth (steel structures only); (see examples 2 and 3 below)

k. Foundation type and diameter (see example 3 below)

l. Name of tap line, if applicable (see example 3 below)

Example 1—Wood Pole with Guying

75'-75' TG420 CL-2
X-BRACE
4SG-2A(24D),45', 50'LD

Example 2—Steel Pole with Direct Embed

80' TG201 STEEL
DIRECT EMBEDMENT 10'-0"

Example 3—Steel Structure with Caisson on a Tap Line

85' TS600 STEEL SW#3L162
CAISSON: DEPTH=26'-6",DIA=6'-6"
TAP TO VALLEY SUBSTATION

9. Phasing

a. Represent phasing using phasing diagrams (i.e., structure stick figures) showing how the structure is configured. Note phasing at the conductor attachment points.

b. Show the new phasing diagram in profile view whenever there is a framing type change or transposition.

c. Place the structure number and directional coordinates under the phasing diagram. Show the direction of the structure looking ahead according to stationing.

d. Indicate how phasing was determined as a note on new drawings or in the revision block for revised drawings. For satellite phasing, note the reference used (e.g., Portland hub, Salt Lake City hub). For phasing determined visually, note the source (e.g., line patrolman, transmission engineer, or operations from sub to sub).

Printed versions of this handbook document may be out of date. Please consult the online engineering handbook for the most recent version.
©2015 by PacifiCorp Engineering Publications.

10. Required Elements for Plan & Profile Drawings

See the company's sample plan and profile drawing for examples of the following required elements.

10.1. Plan View Required Elements

a. Adjacent transmission lines and taps labeled with line name, voltage, and drawing number.

b. Topographical features such as bodies of water, ditches, wetlands, rock outcroppings, wooded areas, highways, main roads, local roads, dirt roads, buildings, fences, pipelines, other utilities (above- or underground), railroad tracks, orchards, other power lines, trees, curb and gutter, driveways, sidewalks, and vegetation.

c. Crossings such as highways, roads, wire crossings, pipelines, and railroad tracks shown with labels.

d. County and state lines, shown with labels.

e. Section line labels. Label section corners and center of sections with the appropriate blocks. Label text must be oriented to correspond with the north arrow (such that the text is right-side up when the drawing is oriented with north arrow pointing upwards).

f. Section and quarter-section lines with labeled section corners. Where available, include 40 acre lines.

g. Section corner ties. The transmission line should be tied to a section corner or quarter-section corner at least twice per sheet, preferably at angle structures. Label ties with the bearing and distance.

h. Coordinates at every angle structure. On drawings with no angle structure shown, a minimum of two coordinates shall be tied on the sheet at two tangent structures.

i. Coordinates in UTM feet, NAD 83, within the proper zone, 10, 11, 12, or 13.

j. Angle structure labels. All angle structures are to be labeled showing the structure number, station, and deflection angle ahead to the nearest second, with the coordinates, for example:
#50 138+00 PI=39°44'13"RT. N: 151878525 E: 889886.

k. Label at least every fifth structure.

l. Substation labeled with large text. Only show the perimeter fence, substation rack (deadend structure), span going into the substation, and attachment point at the substation rack.

Printed versions of this handbook document may be out of date. Please consult the online engineering handbook for the most recent version.
©2015 by PacifiCorp Engineering Publications.

m. Down guys shown in the direction that the structure is guyed, with the number of anchors visually represented. (Use the guying layer and correct anchor dimension style.)

n. Span guys and stub poles (shown with the guy leads).

o. Transmission right-of-way (ROW) lines with labeled width.

p. Survey bearing next to the centerline placed in each bearing section between angle points.

q. Section, township, and range lines labeled when crossed. If a township and range line isn't shown through the viewport in paper space, the township and range label shall be placed parallel to the north arrow.

r. North arrow.

10.2. Profile View Required Elements

a. Section of line labeled with a letter corresponding to the conductor table. Each section shall be labeled whenever there is a change in the conductor info. Changes in conductor info include wire type, ruling span, and maximum working tension.

b. Structure numbers for every structure listed beneath the pole. Structures are numbered sequentially with a number symbol (e.g., #145) or structure over mile (e.g., 14/12).

c. Major station gridlines labeled horizontally every 1000 feet for 400-scale drawings or every 500 feet for 200-scale drawings.

d. Major elevation gridlines labeled every 100 feet for 400-scale drawings or every 50 feet for 200-scale drawings.

e. Ground elevation lines shown as surveyed along the centerline of the main line route. If necessary, right and left side shots should be shown and labeled as "R" or "L."

f. Profile grid using a standard grid block which shall never be exploded. For most profiles, the "profile1" block is appropriate. In cases where the profile doesn't accurately correspond to the "profile1" block, the "profile3" block may be substituted. The "profile2" block is used for full-page profiles.

g. Crossings above or below the ground line noted under the ground elevation line. Crossing may include any obstacle with horizontal or vertical clearance restrictions, such as wires, roads, railroad tracks, water ways, signs, trees, buildings, pipelines, underground utilities, etc.

h. Conductor sags drawn using information from the conductor table.

i. Direction of structure stationing and numbers, increasing as they move from left to right across the sheet.

j. Station tic marks placed perpendicular to and on the bottom of the grid line.

k. Structure stations labeled vertically above tic marks (include station equations as necessary).

l. Deflection angle text (rounded to the nearest minute) shown at the bottom of the profile grid next to the structure station.

Printed versions of this handbook document may be out of date. Please consult the online engineering handbook for the most recent version.
©2015 by PacifiCorp Engineering Publications.

m. Mile markers placed at the bottom of the profile gridline every mile using the standard mile marker block. Mile markers shall run in the same direction as the structure numbers and stationing.

n. Poles drawn to full height, taking into account the standard embedment depth of ten percent of pole height plus an additional two feet. For example, an 80-foot pole will measure 70 feet from the ground line to the pole top.

o. Wire attachments for transmission, distribution, neutral, and communication using the "PRO-ARM" layer to draw a short line perpendicular to the structure line at each attachment point. This layer is visible but will not plot.

p. Span length (rounded to nearest foot) listed below the bottom conductor between structures horizontally.

q. "Fiber Splice" block placed at OPGW AND ADSS fiber deadend splice locations on the pole in the profile view.

r. "VERT-INS-TIP" block placed where a conductor attachment is above the pole top because it is attached to a vertical post insulator.

s. "DAMPER-SPIRAL" or "DAMPER-DOGBONE" blocks placed as appropriate.

10.3. Paper Space

The only objects that belong in paper space include the structure table, conductor table, standard abbreviation block, and CORPD-TRAN border.

11. Handbook Issuing Department

The engineering standards and technical services department of the company published this document. Questions regarding editing, revision history and document output may be directed to the lead editor at eampub@pacificorp.com. Technical questions and comments may be directed to Daniel Newcomer, transmission engineering, (503) 813-6791. This handbook document shall be used and duplicated only in support of company projects.

Printed versions of this handbook document may be out of date. Please consult the online engineering handbook for the most recent version.
©2015 by PacifiCorp Engineering Publications.

9B.2—Substation Drafting Standards

1. Scope

This section of the company's engineering handbook provides substation discipline-specific drafting and design standards, including details on electrical and protection & control drawings.

For an overview of general company drafting standards, see Engineering Handbook Volume 9A, *Computer-Aided Design*.

2. General

Standard drawings and blocks have been developed for use in substation drafting. They are referred to here. However, the actual standard drawings reside within Document Manager and the AutoCAD blocks reside within the ...\AutoCad Support\ directory.

Tabbed files are not used in electrical drawings.

3. General Drafting Practices

The following are general drafting practices standard to the company. When creating documents for company substation engineering, adhere to the standards set forth by the engineering and asset management department.

3.1. Title Blocks

Title blocks of existing drawings shall be converted to the current title block. This is not necessary if the drawing is being voided, or being used only for reference in the design package. Older drawings shall not be voided and superseded with a new drawing just to bypass the process of converting the title block.

The command TBS, or the BAD audit tool, will convert nearly all older title blocks with minor cleanup. The older revision history is deleted and is not transferred to the new title block. If it is deemed necessary to keep the most recent revision, then the REVSWAP command can be used to convert the old nomenclature into the new revision block.

Any floating text over the old title block shall be removed or entered into the new title block.

3.1.1. Title Block Nomenclature

If the following information is missing, it shall not be corrected or filled in with current project nomenclature:

- WO/ER#
- Date
- Signatures

Printed versions of this handbook document may be out of date. Please consult the online engineering handbook for the most recent version.
This document shall be used and duplicated only in support of PacifiCorp projects. ©2017 by PacifiCorp.

If the following information is missing or incorrect it shall be corrected. Refer to engineering document Policy 104, *Indexing of Discipline and Document Type*, for correct disciplines and document types:

- Discipline name (for example, “SUBSTATION” is not a valid discipline name)
- Document type
- Substation name for example, if the voltage is included in the substation name, “DIXONVILLE 230KV SUBSTATION,” the voltage shall be removed. Keep in mind that DIXONVILLE 500 (without the KV) is a valid facility name and 500 is not to be removed. If the facility is DIXONVILLE 500 and the 500 is missing it will need to be added. The plant locality for DIXONVILLE 500 is 068163.
- Scale, which shall read, “NONE,” “AS NOTED,” or be entered with a valid scale

3.1.2. Correct Date Format

- JANUARY 03, 1997 shall be 01/03/1997
- 1-3-97 shall be 01/03/1997
- 1/3/1997 shall be 01/03/1997

3.1.3. Sheet Numbering

Sheet numbering shall be corrected as follows:

1. Sheet 1 shall read, “1 OF (total sheets)”
2. 2 OF 10 shall read, “2”
3. 2 OF * shall read, “2”

3.1.4. Plant Locality Number

The plant locality number, shown shall be 6 digits. If the plant locality number is missing or incorrect, it shall be filled in or corrected. If the plant locality number is only 5 digits, place a zero (0) at the beginning of the plant locality number.

3.2. Drawing Numbers

Drawing numbers are assigned, and establish a relationship between each drawing within a drawing series. Drawing numbers are unique identifiers, managed within the Document Manager system. Any addition, removal or modification must be approved by the company’s document control department. For more information on this process, see Volume 9A.2, section 7, *Drawing Numbers*.

3.2.1. Adding New Drawing Numbers

If a new drawing number is needed, email drawing@PacifiCorp.com to reserve drawing numbers for your project.

Printed versions of this document may be out of date. Please consult the online engineering handbook for the most recent version.
This document shall be used and duplicated only in support of PacifiCorp projects. ©2017 by PacifiCorp.

3.2.2. Adding Drawings to a Series

If new drawings are to be added to an existing number series, sheet 1 of that series is checked out so that the total number of drawings in the title block can be modified to reflect the new drawing series total. Adding new sheets to the end of the drawing series may be the only modification to sheet 1, and in this case, sheet 1 will be included in the design package and “rev'ed up” with a revision cloud around the new total number of sheets.

3.2.3. Legacy Drawing Numbers in Drawings

Use the FIND command to replace any old drawing name formats that reference legacy drawing names, for example: PD-, PA-, PC-, PB-, UD-, UE-, UC-, as the prefix of the drawing number. If any such names are found, they shall be deleted, leaving only the 5-digit number.

Find-and-replace will also do a global legacy number clean-up. Enter the prefix “PA-” in the find field and select “Replace All”; do this for all prefixes mentioned above. If the drawings are in .tif format, remove the prefix using “raster design.”

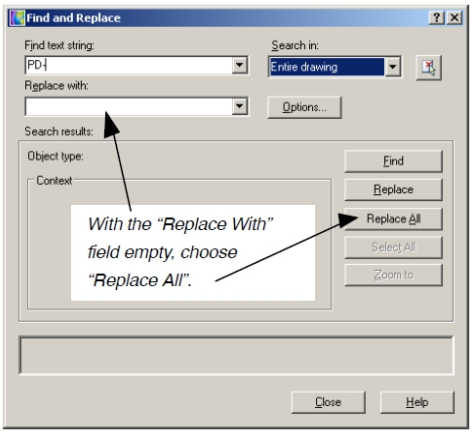

Figure 1—Find-and-Replace to Remove Legacy Prefixes (Example)

3.2.4. Splitting Drawings

New drawing sheets shall not be created from an existing sheet within a drawing series by splitting the drawing and naming it with an “A” behind the drawing number (for example, 12345A09A , or 123456.009A).

If a drawing must be split, perform either of the following:

1. Move forward all drawing content of the sheets following the sheet being split. This is described in the process for creating a key sheet. If this process is problematic, call AutoCAD technical support at (503) 331-4392 for assistance.
2. Move the two sheets to the end of the series making them both Rev 0 drawings. The drawing number that is being split or moved will be rev'ed up and left black as a place-

Printed versions of this document may be out of date. Please consult the online engineering handbook for the most recent version.
This document shall be used and duplicated only in support of PacifiCorp projects. ©2017 by PacifiCorp.

holder for future use. See Engineering Handbook Volume 9A.4, section 3.7 for information on voiding drawings.

3.3. Drawing Notes

Parentheses should not be used when a reference to a note is associated with a leader. When the reference is within a sentence or without a leader, parentheses should be used. See Figure 2 below. The text should read “NOTE 1” rather than “SEE NOTE 1.”

Strings of text that refer to a certain note shall be consistent in all the company drawings.

```
                 ←—— NOTE 1
                 ←—— (NOTE 1)
INCORRECT        ←—— SEE NOTE 1
                 ←—— (SEE NOTE 1)

NOTE REFERENCE WITH A LEADER


                 (NOTE 1)
                 NOTE 1
INCORRECT        SEE NOTE 1
                 (SEE NOTE 1)

NOTE REFERENCE WITHOUT A LEADER


                 EXISTING GROUND GRID IS 2/0 CU. (NOTE 1).
                 EXISTING GROUND GRID IS 2/0 CU. NOTE 1.
INCORRECT        EXISTING GROUND GRID IS 2/0 CU. SEE NOTE 1.
                 EXISTING GROUND GRID IS 2/0 CU. (SEE NOTE 1).

NOTE REFERENCE WITHIN A STRING OF TEXT
```

Figure 2—Text String Formatting For Notes

Printed versions of this document may be out of date. Please consult the online engineering handbook for the most recent version.
This document shall be used and duplicated only in support of PacifiCorp projects. ©2017 by PacifiCorp.

3.4. Dimensions

Use the appropriate DIM style for the scale of the viewport from the standard palette. Do not modify, create, or stick-build dimensions. Always use real associative dimensions and QLEADERS taken from the standard palette. Follow these guidelines:

1. Place dimensions on the DIM layer color green.
2. Leaders shall be placed on the same layer with which they are associated, not the DIM layer. Typically this is the text layer.
3. Linear dimensions should be offset when arrows are forced out, to keep arrowheads from overlapping (see Figure 4).
4. DIM text shall be above the dimension line or off to the side, and centered, when the arrows are forced out.
5. DIM nodes shall be snapped to the entity being dimensioned such that the DIM gap is displayed and not overlaying the object.
6. When dimensioning to a circle, the DIM nodes shall be snapped to the quadrant (not to the center).
7. Dimensions originating from a line type (such as a center line or property line), shall have extension lines pulled back to the arrowhead so that the line type is not compromised.
8. Floating text placed outside the dimension shall be avoided. Enter additional text within the dimension by entering “ED” at the command line. To place text beneath the dimension line, enter a backward slash and an uppercase “X” behind the dimension value. The “ \X ” will force the additional text below the dimension line.

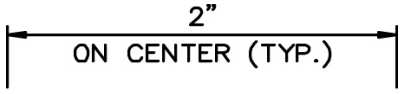

Figure 3—Forcing Text Below the Dimension Line (Example)

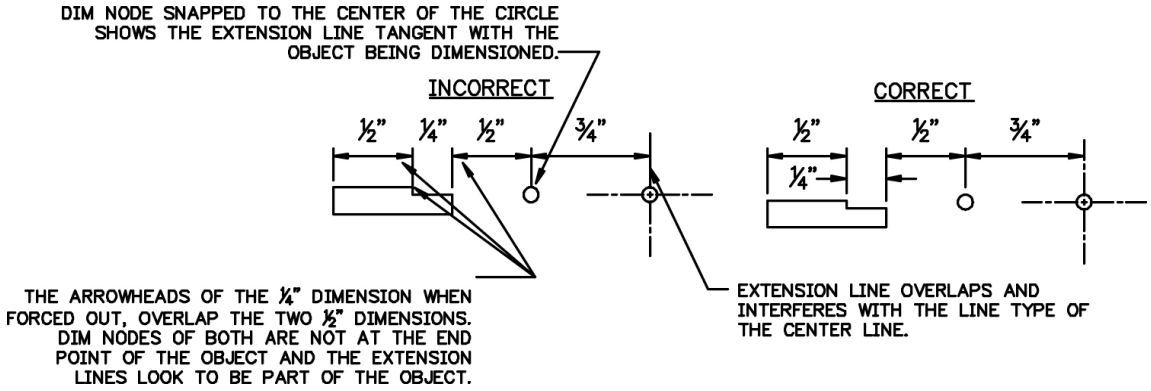

Figure 4—Overlapping in Linear Dimensioning

Printed versions of this document may be out of date. Please consult the online engineering handbook for the most recent version.
This document shall be used and duplicated only in support of PacifiCorp projects. ©2017 by PacifiCorp.

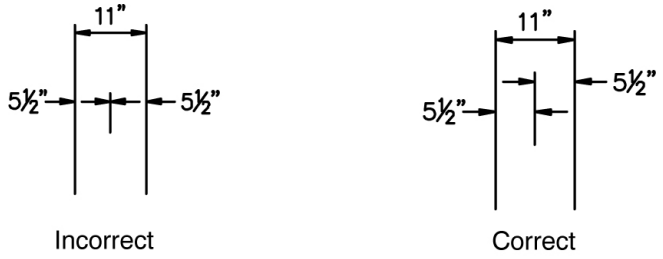

Figure 5—Electrical Dimensioning

3.5. Hatch

Place a hatch object within a closed PLINE using the hatch-outline layer to create the hatch boundary. The boundary is to be retained (not deleted) so the hatch remains associated. Be sure that the insertion points of all hatches are within the closed boundary, not at a point outside. Ensure this by selecting the hatch to see where the grip is located.

Never explode hatch. If time permits, replace a poorly-placed hatch that does not comply with the criteria described above.

3.6. Key Sheets

When a key sheet is added to an existing drawing series, as in a one-line, general plan or grounding plan, the original sheet 1 becomes the key sheet. The document type stays as the same. The text “Key Sheet” is placed on the fourth line (attribute #6) of the title block. The title block retains its original information and is rev'ed up. All title blocks of the subsequent sheet files stay in place. Only the drawing content is transferred to the other sheets (and rev'ed up) with the revision block describing the modification. Revision blocks and information are not moved to other sheets with the drawing content. However, the new revision shall note that the sheets were moved forward due to the addition of a key sheet. Alternately, a note may be placed to indicate this. See " Title Blocks" on page 1

The last sheet shall be a new sheet with all the new nomenclature in the title block and will be a rev-zero drawing, even if the drawing content came from an existing drawing. Sheet 1 will have the total number of drawings adjusted to reflect the new sheet total, with a cloud around the new number. The revision block shall describe the modification.

Note: Matchlines should be used on all key sheets except for one-lines in which the key sheet line type and text should be used. For more on placing matchlines, see " Matchlines" on the facing page, Matchlines.

3.7. Layers

This section provides general instruction regarding drawing layers. See " Layers" on page 27 for layers specific to electrical, and protection & control drawings.

Legacy title blocks and reference drawing blocks were built using a layer called “BDR.” If present, this layer shall be converted to layer zero using the BAD audit routine.

Printed versions of this document may be out of date. Please consult the online engineering handbook for the most recent version.
This document shall be used and duplicated only in support of PacifiCorp projects. ©2017 by PacifiCorp.

Do not use the Layer Translator to convert the BDR layer. This will force the colors back to bylayer causing the title block and the PacifiCorp logo to lose their forced colors.

3.8. Matchlines

Use the dynamic MATCHLINES block, which contains different views for the different uses. This block is found on the standard palette on the paperspace tab.

1. Stretch the matchline out past the area of entities that terminate at the matchline by an inch or so. The text can be stretched along the line for desired placement.
2. Remove all entities beyond the matchline by trimming, or clipping with XCLIP.

3.9. Tab / Tabbed Files

Tabbed files shall not be used in the company's electrical or protection & control drawings.

3.10. Watermarks

Drawings undergoing review during the design phase shall be labeled by selecting the appropriate view of the provided "issue stamp" block, or by a watermark in PDF files. This process is only used when the drawings are going to an external entity for bid purposes, or for preliminary review.

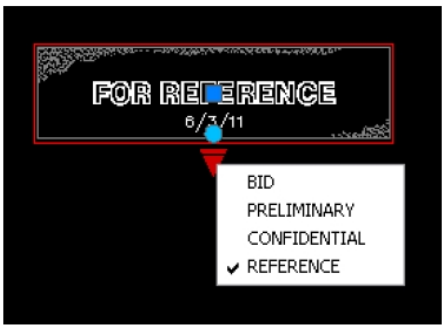

Figure 6—Watermark Setup Options

Drawings issued for construction shall not use this block or be watermarked. Construction drawings must have final approval signatures, with an attached transmittal for construction.

4. Demolition/Green Line Drawings

Demolition drawings are not retained or uploaded into Document Manager. For construction purposes, the AutoCAD file is "saved-as" with the word "DEMO" placed in front of the file name with a dash, and also in the title blocks as follows:

Example: DEMO-123456.001.dwg title block reads, "DEMO-123456.001." The original drawing number of 123456.001 is retained, and the existing content is replaced with the new design with a revision cloud and revision block describing the new work.

Printed versions of this document may be out of date. Please consult the online engineering handbook for the most recent version.
This document shall be used and duplicated only in support of PacifiCorp projects. ©2017 by PacifiCorp.

When there is a need to include “Green Line” drawings with a construction package, observe the following procedure:

1. The drawing is copied out of Document Manager in its original form, and is kept separate from the other construction drawings in a “reference drawings” folder. It is important that changes are not made to the drawing being used for the green line.
2. The drawing is printed full size (22″ × 34″), and the portions to be removed are marked with a green pencil or highlighter taking care not to obstruct the text. When all parts to be removed have been marked, the drawing should be scanned in color and a copy retained with the project documents for reference.
3. The green line is included with the construction package that is issued to the field; however there is no need to reproduce it for all the packages.

5. Manufacturers’ Drawings

5.1. Placement and Scale

Manufacturers’ drawings are to be placed in modelspace and shown through a viewport. The viewport is not zoomed to extents, but scaled so that the text is at or near the height of 3/32″.

5.2. OLE Objects

Some manufacturers’ files may come with OLE Objects. These objects shall be embedded rather than linked.

5.3. Color Modification

Generally, manufacturers’ drawings are not modified unless any layer or entity uses the colors cyan, red, #30, #140, or #230. Those colors have an undesirable bleed and shall be changed to a color that plots lighter. Additionally, line weights need to set to bylayer.

5.4. Manufacturer’s Title Block

Place a minimum margin of 1″ between the manufacturer’s title block and PacifiCorp’s title block.

5.5. Trachte Manufacturer Tab Files (Converting Drawings that Use Tabs or an XREF’ed Title Block)

Files from manufacturers’ drawings with attachments will not be accepted, and shall not be entered into Document Manager.

5.5.1. Handling Tab Files

1. Bind the XREF’ed manufacturer’s title block to the tab file (do not XREF this).
2. Separate tabs into individual drawing files, i.e., 123456.001, .002, and so on. (There can be approximately 25 to 35 tabs to a file.)

Printed versions of this document may be out of date. Please consult the online engineering handbook for the most recent version.
This document shall be used and duplicated only in support of PacifiCorp projects. ©2017 by PacifiCorp.

3. In the new sheet files, bring all that is in modelspace to paperspace by typing CHSPACE in each of the viewports. This allows the process in step 7 to take place without bringing nested layers that are frozen to paperspace.

5.5.2. Handling Layers

In the layer manager, change all layers that use cyan to white and change any entity forced to cyan back to bylayer.

In each of the viewports, layers are frozen within certain blocks so that certain entities do not appear when plotting. In modelspace, use the BURST command and select all the entities by making a window or crossing around them.

Note: This process only affects blocks with nested layers or layers which are frozen in the viewports (not text or dimensions).

As the final step, PURGE all.

5.5.3. Handling the Viewports

1. in files viewing the same entities through two different viewports:

   a. Enlarge one of the viewports.

   b. Enter into floating modelspace.

   c. Make a copy of the entities being shown in another viewport.

   d. Bring that copy to paperspace.

   e. Delete that viewport.

   f. Move the copied entities to the desired location in paperspace.

   g. Enter the viewport of the other showing the same entities, and bring them to paperspace.

   h. Delete that viewport.

2. Once all valid contents are in paperspace, delete all the viewports, go to modelspace and delete all that is left behind.
3. In paperspace, create a single viewport with an appropriate scale and transfer all the manufacturers' entities through it into modelspace. Lock the viewport and "purge all."

5.6. Switchgear Drawings

Of the files provided, nearly half are true manufacturers' files; the rest come from the company's standard drawing files. The true manufacturers' files should already have the document type "Manufacturer's Drawing" in the 3rd line of the title block.

The company files already meet the substation discipline's 3rd line drafting standard. Do not replace what is already in the 3rd line of the title block with another 3rd line doc type. Do not change the document type to read "Manufacturer's Drawing," and do not change the layout name for these files.

Printed versions of this document may be out of date. Please consult the online engineering handbook for the most recent version.
This document shall be used and duplicated only in support of PacifiCorp projects. ©2017 by PacifiCorp.

5.6.1. Logo

Leave the manufacturer's logo in all the drawings.

5.6.2. Numbering the Drawings

Number the switchgear drawings with the following criteria:

1. Manufacturer's drawings shall share the same 6-digit drawing number, with the suffix of .001, .002, .003, etc.
2. Potential schematics and current schematics shall have a different 6-digit drawing number, either the same number as the existing relative schematic of the substation (if it exists), or a newly-assigned number.
3. The one-line drawings shall also have another 6-digit drawing number, combined together under one 6-digit number with the suffix of .001, .002, .003, etc, or added to the substation's existing one-line drawing series.

The same process applies to key sheet drawings (see " Key Sheets" on page 6, Key Sheets).

5.6.3. Layers

Two layers are provided and used by the manufacturer when connecting to company drawings. The layers are:

1. OEM-PPP-DIM
2. OEM-PPP-WIRING

These layers are used only by the switchgear manufacturer, and are to be left in the drawings as they are. They are not to be converted to layer zero or the text layer, or dim layer.

6. Text

All text is to plot at a height 3/32″. Single line text (DTEXT) is preferred for single strings of text. Multiline text (MTEXT) is preferred for strings of text, such as notes, that require multiple lines of text.

When placing DTEXT, justification shall be set either left, right, or centered with a plotting height of 3/32″.

MTEXT justification shall be appropriate to the placement of the text in relation to the design with which it is associated. For example, TL, TC, or TR shall be used with leaders and notes.

6.1. Headings

A block called SUB TITLE is used beneath larger details, in plan drawings, and plan and elevations drawings, and is placed on layer zero. This block is placed beneath each detail in the same modelspace or paperspace environment where the detail is located. Protection & control drawings do not use this block.

Printed versions of this document may be out of date. Please consult the online engineering handbook for the most recent version.
This document shall be used and duplicated only in support of PacifiCorp projects. ©2017 by PacifiCorp.

Another block called MULTILINE SUBTITLE is used where multiple lines of text need to be used for both top and bottom attributes.

In legends, notes, tables, and other areas where the desired height is 1/8”, text is placed on the text layer (not the text-hvy layer, which has been removed from production).

6.2. Layers

Text shall be placed on the text layer, color yellow from the standard palette. Other acceptable layers for text are as follows:

1. FUTURE
2. DIM, if the text is associated with the dimension, but it is preferred that the text be entered inside the dimension. See " Dimensions" on page 5, Dimensions.
3. REV (if associated with the revision cloud, which is removed during the next revision)
4. KEY-SHEET-LINE-TEXT with a text height of 1/8″ for the associated text

6.3. MTEXT Editor

In the MTEXT editor, if the fraction is stacked horizontally, right mouse over the stacked fraction to obtain the menu as shown below, and select “Stack Properties.” If the menu is hidden, first type ATTIPE, set it to 1, then return to the MTEXT editor and proceed.

Printed versions of this document may be out of date. Please consult the online engineering handbook for the most recent version.
This document shall be used and duplicated only in support of PacifiCorp projects. ©2017 by PacifiCorp.

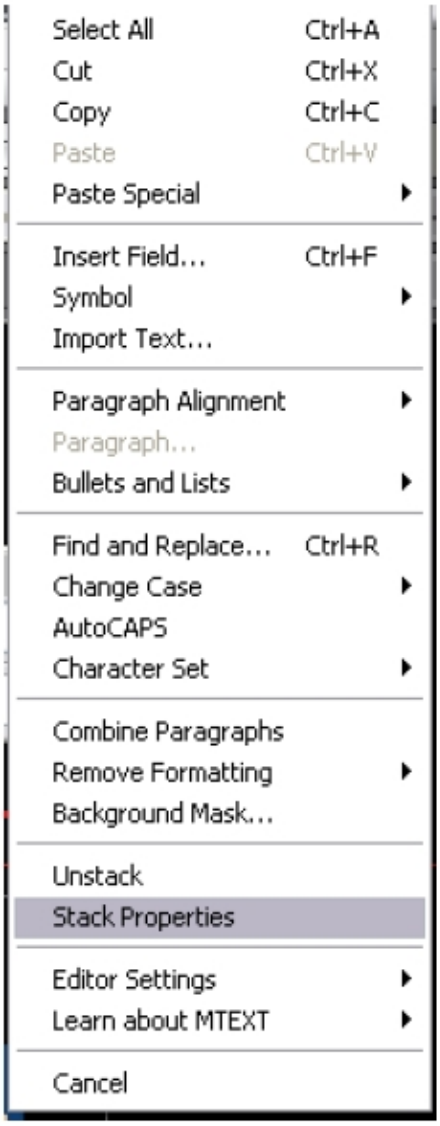

Figure 7—Selecting Stack Properties

Set the appearance to “Fraction, Diagonal,” then select “AutoStack,” and check the boxes as shown below in "AutoStack Properties."

Printed versions of this document may be out of date. Please consult the online engineering handbook for the most recent version.
This document shall be used and duplicated only in support of PacifiCorp projects. ©2017 by PacifiCorp.

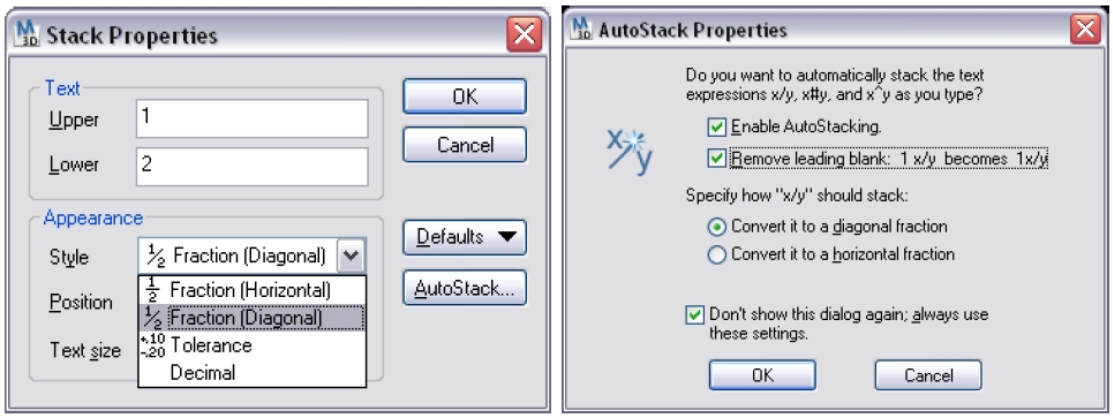

Figure 8—Fractional Diagonal Appearance and Set AutoStack Properties

7. Notes

The offset and separation between notes and legends and from the title block should be visually consistent within the drawing and other drawings within a set. The separation shown below is a guide since the arrangement of the notes is sometimes dictated by the layout of the drawing. For example, notes across the bottom or along the right side but read from the right as with legacy wiring diagrams.

The stacking order always places construction notes on top and places the reference drawings always on the bottom. Please note that colons (:) are not used as a suffix to the titles, i.e., NOTES rather than NOTES:

1. The “Construction Notes” block is used for these notes and is placed on REV layer to be removed during the next revision.
2. If the reference drawing block is not used, it shall be deleted. If it is deleted, the other notes will be moved toward the bottom near the title block.

Printed versions of this document may be out of date. Please consult the online engineering handbook for the most recent version.
This document shall be used and duplicated only in support of PacifiCorp projects. ©2017 by PacifiCorp.

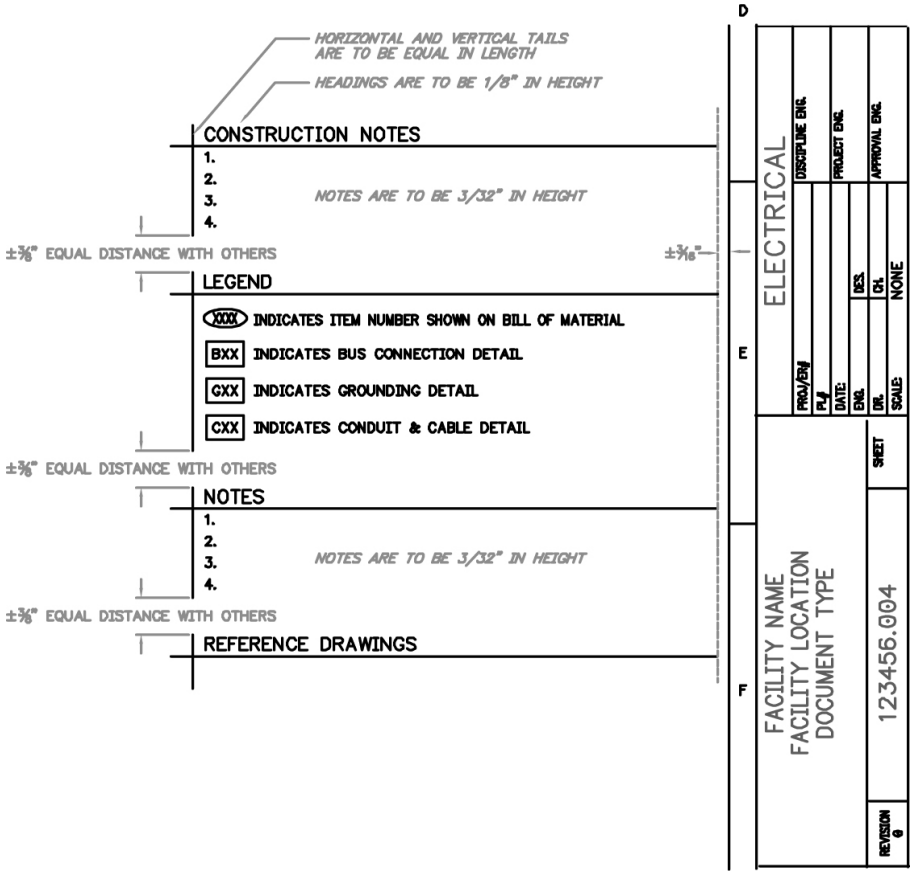

Figure 9—Note Stacking Order/Offset

8. Page Setup

The page setup shall be set to the D-Size-KIP7000 setup found in the CORP-D template file.

Note: For in-house drafters, perform page setup by entering PSETUP at the command line. When done editing the files, set the current layer to layer 0, ZOOM EXTENTS, save and exit. “Purge” all at the time of review, and again at the end of the project.

9. Standard Drawing Files

If drawings are taken and ’saved-as’ from a company standard file, leave the layout name unchanged so the original source drawing file is identifiable. This will help to troubleshoot a standard file that may need to have CAD or design corrections made to it.

The layout name need not be the same as the CAD file. Make the layout and CAD names the same only when the file is saved from another substation in which the layout name has already been named to match that file name.

Thaw the rev layer, delete all the revision clouds, and then purge the rev layer.

Printed versions of this document may be out of date. Please consult the online engineering handbook for the most recent version.
This document shall be used and duplicated only in support of PacifiCorp projects. ©2017 by PacifiCorp.

10. Electrical Blocks

10.1. Major Equipment Blocks

Major equipment is created on layer 0. Major equipment typically comes with too much detail and should be reduced in size by deleting any unnecessary entities. All small and close knit entities within the interior of these blocks that may cause ink to merge when plotting should be forced to color 9. With these types of blocks, the exterior perimeter of the major equipment is to remain as a color bylayer.

Layers such as center or hidden may be used within a block, while the majority of the block is constructed on layer 0. The completed block is placed on the correct layer.

10.2. Wipeout

The use of WIPEOUT is preferred rather than exploding and trimming blocks that lay in front of or above other entities. WIPEOUT is only to be used when needed, and only within a block. It is undesirable to have a wipeout floating in the field of the drawing and outside of a block.

10.3. Editing a Block in Block Editor

Use the wipeout layer found on the “physical layers” tab on the standard palette and follow these steps for editing a block in block editor:

1. Using the WIPEOUT command, a closed PLINE is traced around the outer portion of the desired view of the block using the wipeout layer. For arcs and circles, a crudely placed PLINE with minimal pick points along the curve is preferred. Picking points tightly traced around curves or circles as shown below is not necessary.

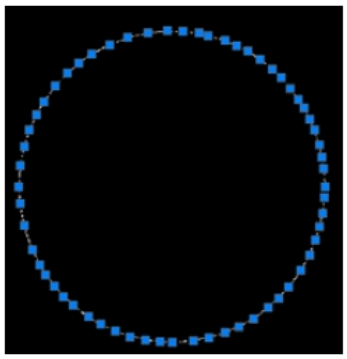

Figure 10—Incorrectly-Traced PLINE

2. Close the PLINE and temporarily turn off the wipeout layer. Under the edit menu, copy all entities in the view by using the COPY WITH BASE POINT command. Use the coordinate of 0,0.

Printed versions of this document may be out of date. Please consult the online engineering handbook for the most recent version.
This document shall be used and duplicated only in support of PacifiCorp projects. ©2017 by PacifiCorp.

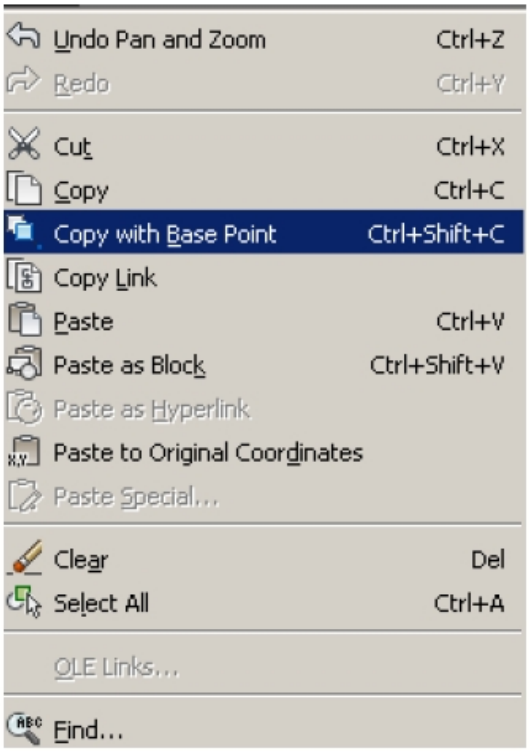

Figure 11—Use the COPY WITH BASE POINT Command

3. “Erase Previous,” and then paste the copied entities at 0,0. Do not use the option “Paste as Block.”
4. Turn on the wipeout layer.
5. Exit the block editor, and ensure that the wipeout you have placed is working correctly by inserting it over, or in front of, other blocks or entities.
6. Make sure that the wipeout layer is set to plot, otherwise it will not display correctly.
7. “Erase Previous,” then paste what was copied with base point at a coordinate of 0,0. This will place the wipeout beneath the entities of the block and establish a permanent draw order. AutoCAD will “assume” that the wipeout was drawn first.

This process ensures that the display order is correct and that the wipeout is beneath the block entities.

Printed versions of this document may be out of date. Please consult the online engineering handbook for the most recent version.
This document shall be used and duplicated only in support of PacifiCorp projects. ©2017 by PacifiCorp.

11. Images

Place .tif images on a layer called IMAGE, color “7,” with a continuous line type. The image, when attached, shall match the AutoCAD file name. Only one image attachment per CAD file is permitted.

The following procedures are standard for the placement of images in company drawings:

1. Insert .tif images in modelspace.
2. Deselect the “Specify On-Screen,” “Scale,” and “Insertion Point” boxes within the image dialog box. Turn on image transparency and turn off image frame.
3. Use the ZOOM EXTENTS command and scale the image by reference so that the objects are at a one-to-one scale.
4. If there are dimensions, scale them by reference to one of the longer whole number dimensions.
5. If images are wiring drawings, scale them so the text and symbols match PacifiCorp’s CAD standards for symbols and text heights.
6. If the image has scalable entities such as plan and elevations, the viewport is given a standard scale, and that scale shall be entered in the title block.
7. If images are wiring, the viewport shall be 1:1, and the scale entered into the title block shall read, “NONE.”
8. If the drawing requires a scale bar or north arrow, place them in paperspace.
9. Ensure that the image is not hard-pathed. If it is, clear it using the FX command.
10. The image will often come attached to existing drawings with a generic file name. That name shall be corrected to match the CAD file.

11.1. Image Modifications

- Images shall be cleaned of any of the following that may show up when plotting:

    a. speckles and smudges

    b. construction and text lines

    c. previous revision numbers and clouds

    d. creases from folded paper picked up by a scan

- Images are not to be modified using XCLIP, floating wipeouts, or shown through polygonal viewports, in lieu of removing portions of the image. When the image is significantly reduced in size by removing entities, the image frame should be cropped using Raster Design’s “Crop by Rectangular Region.”

11.2. Legacy Drawing Numbers in Images

If reference drawing numbers and names are found in the field of a .tif image, enter the numbers and names into the reference drawing block and edit them from the image. Place this

Printed versions of this document may be out of date. Please consult the online engineering handbook for the most recent version.
This document shall be used and duplicated only in support of PacifiCorp projects. ©2017 by PacifiCorp.

block in paperspace on layer 0 in the lower right-hand corner of the drawing. (Do not explode, burst, or modify this block). All legacy drawing numbers shall be edited out of the image.

12. Hybrid Drawings

The objective with hybrid files is to eventually replace the entire image with AutoCAD entities. When the image has been reduced to 50% or more with design modifications, the extra effort of redrafting the image in CAD should be done, and the image detached.

If editing a file with an image already attached, ensure that the attachment conforms to the above procedures, even if it's not part of the project scope.

If the image is not yet attached to a CAD file and the file name is generic, obtain a correct file name (document name) from Document Manager or through the company's document control department. Do not rename it to the file name taken from the name in the scanned title block. The name in the title block is nearly always incorrect and does not conform to the company's 5-digit legacy or current 6-digit drawing naming conventions.

13. Electrical Discipline Drawings

13.1. General Plan

A layer named "region" is used for areas that need to be shown at a larger scale and placed on separate sheets. For example, if there are multiple conduits on the plan that are too clustered to call out details, a closed polygon is placed around the entities on the region layer to denote the new sheet area. Next to the polygon in a standard string of text is placed the sheet number as shown.

This layer is only used on the general plan, conduit plan, and the grounding plan and does not replace the matchline layer nor does it replace the key-sheet-line-text layer primarily used on one-line drawings.

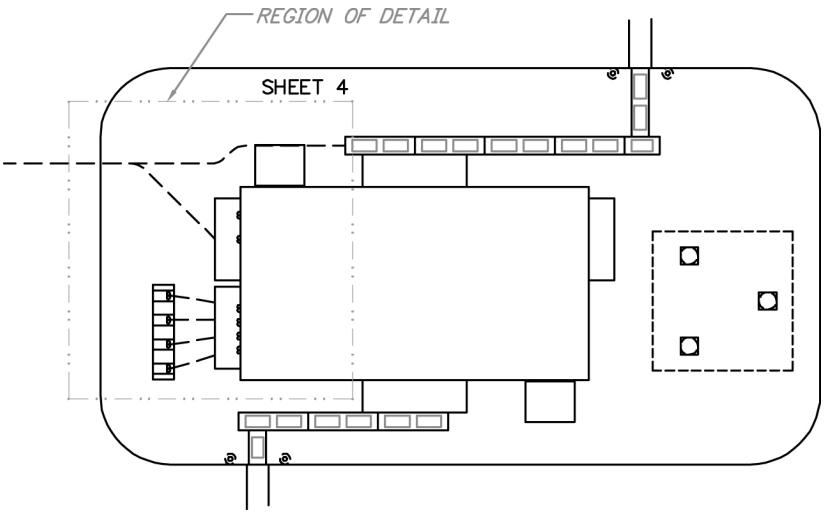

Figure 12—Region of Detail

Printed versions of this document may be out of date. Please consult the online engineering handbook for the most recent version.
This document shall be used and duplicated only in support of PacifiCorp projects. ©2017 by PacifiCorp.

The “ANIMAL-ENHANCEMENT” layer, color 10 (shown in Figure 13, in red) with DASHDOT2 line type is used to delineate the areas where animal protection is required on bus connection details.

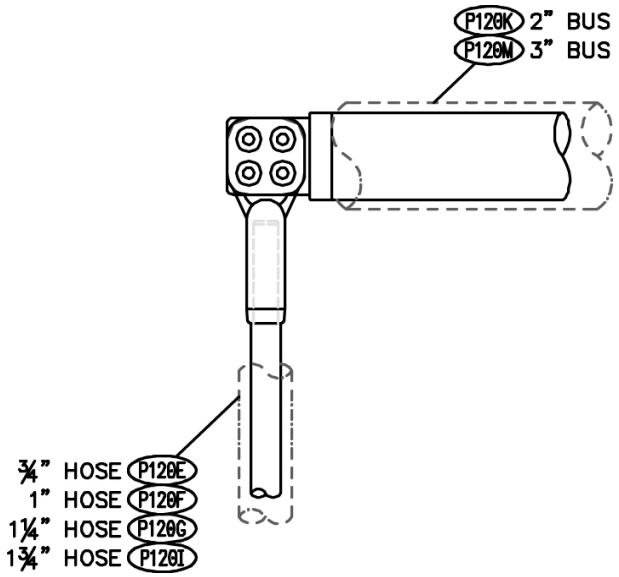

Figure 13—Animal Protection

The DETAIL-FRAME layer color 4 (cyan) with a continuous line type is used as the outer frame to enclose a group of similar details. The inner frames within used to separate the details are placed on layer zero. Figure 14, below, shows an area prepared for one detail.

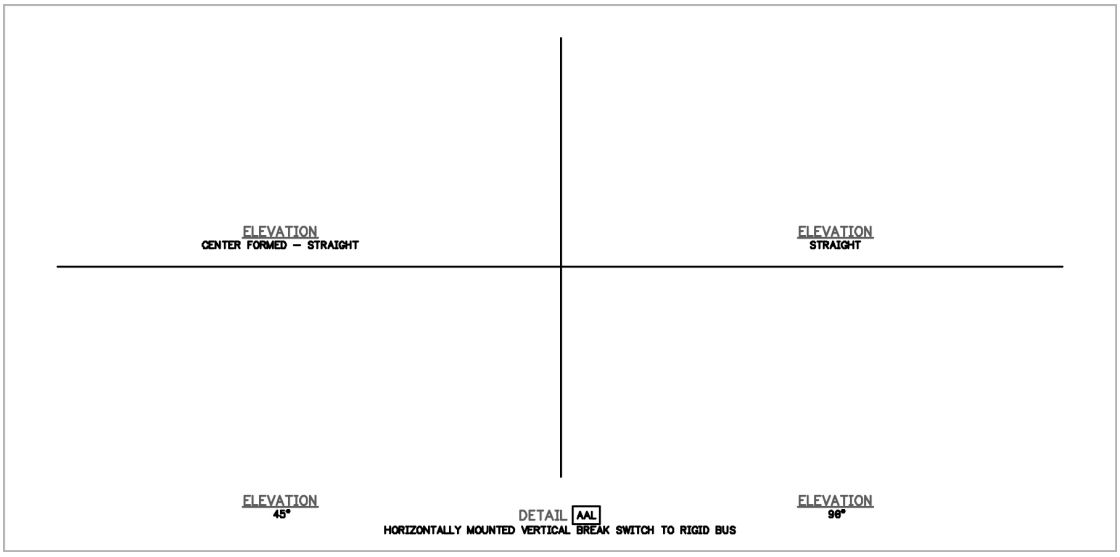

Figure 14—An Area Prepared for One Detail

Printed versions of this document may be out of date. Please consult the online engineering handbook for the most recent version.
This document shall be used and duplicated only in support of PacifiCorp projects. ©2017 by PacifiCorp.

This series of drawings shall have two XREFs attached, the XB and the XE. The XE will share the same 5- or 6-digit file name as the general plan drawing series.

Below are examples of the general plan in large substations where the document type is the same in all sheets.

13.1.1. Property & Transmission Layout Sheet

The first sheet is considered “Property & Transmission Layout.” The 4th line of the title block (tag 6) shall read, “Property & Transmission Layout,” and is shown at a smaller scale showing the overall site plan, i.e., 1″ = 80´-0″.

The first sheet shall have the XB and the XE attached.

13.1.2. Future Development or Ultimate Plan Sheets

The second sheet is considered “Future Development,” or “Ultimate Plan.” The 4th line of the title block (tag 6) shall read, “Future Development.”

The XREF attachments shall be *.UXB and *.UXE, showing the yard as it may look in the future. All equipment shall be on proper layers, not on the future layer. The whole file is considered future.

13.1.3. Sheets Showing the Project Area of the Yard

The 3rd sheet, and others if needed, shall show the project area of the yard (the first general plan used for construction purposes. This sheet and subsequent sheets shall have the XB and the XE attached.

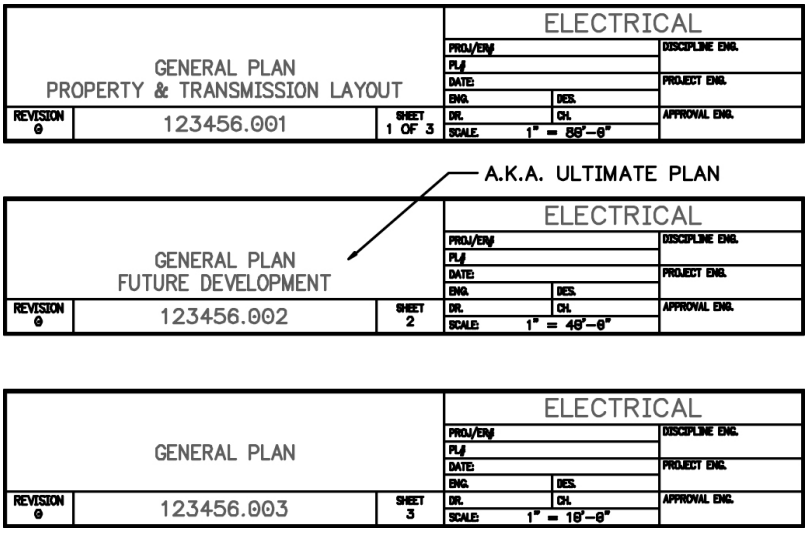

Figure 15—Fourth Line for General Plan by Page

Printed versions of this document may be out of date. Please consult the online engineering handbook for the most recent version.
This document shall be used and duplicated only in support of PacifiCorp projects. ©2017 by PacifiCorp.

13.2. Plan & Elevations Drawings

Plan & elevations drawings are comprised of the XB and the XE XREFs, and are inserted at 0,0 with zero rotation. All plan & elevation drawings shall have a plan above the elevation, shown through one viewport (not two). The XB and XE are XCLIP'ed to display only the necessary plan view, and if need be, the view is twisted in modelspace. The XREFs are XCLIP'ed so the elevation can be placed close to, and below, the XCLIP'ed plan.

The elevation is built directly below the XCLIP'ed plan. When necessary, to build an elevation of the side or top view of the plan, twist the view using the ROT command (rather than the physically-rotating the XREF). The view within the viewport is also twisted, scaled, and locked. Multiple floating polygonal viewports (one for the plan and one for the elevation) are not used in lieu of clipping the XREFs.

13.2.1. Line Leaders

Ovals or circles used for item numbers shall have the line leader originating from the center. Rectangular detail call-outs shall have the line leader originate from the corners of the rectangle. Both are placed on layer zero and shown on the elevation view, or plan view when necessary.

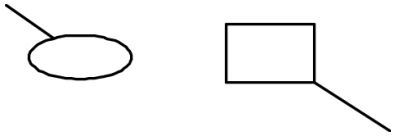

Figure 16—Proper Call-Out Formatting for Item Numbers

13.2.2. Cable, Strain Bus and Grounding Wires

All cable, strain bus, and grounding wires shall be drawn on appropriate layers using PLINES, with the width set to the actual cable size of the cable.

13.2.3. Labeling Breakers, Switches, and Vts on Plans & Elevations

All labels for breakers, switches, and VTs are shown on the "elevation view" rather than the plan view of plans & elevations drawings and are labeled with their respective numbers. The equipment numbers and voltage can be found on the one-line and should be centered below the dimension as shown in Figure 17. An exception would be when there are multiple pieces of equipment at one location. The equipment number shall be shown next to the equipment, also shown in Figure 17.

Printed versions of this document may be out of date. Please consult the online engineering handbook for the most recent version.
This document shall be used and duplicated only in support of PacifiCorp projects. ©2017 by PacifiCorp.

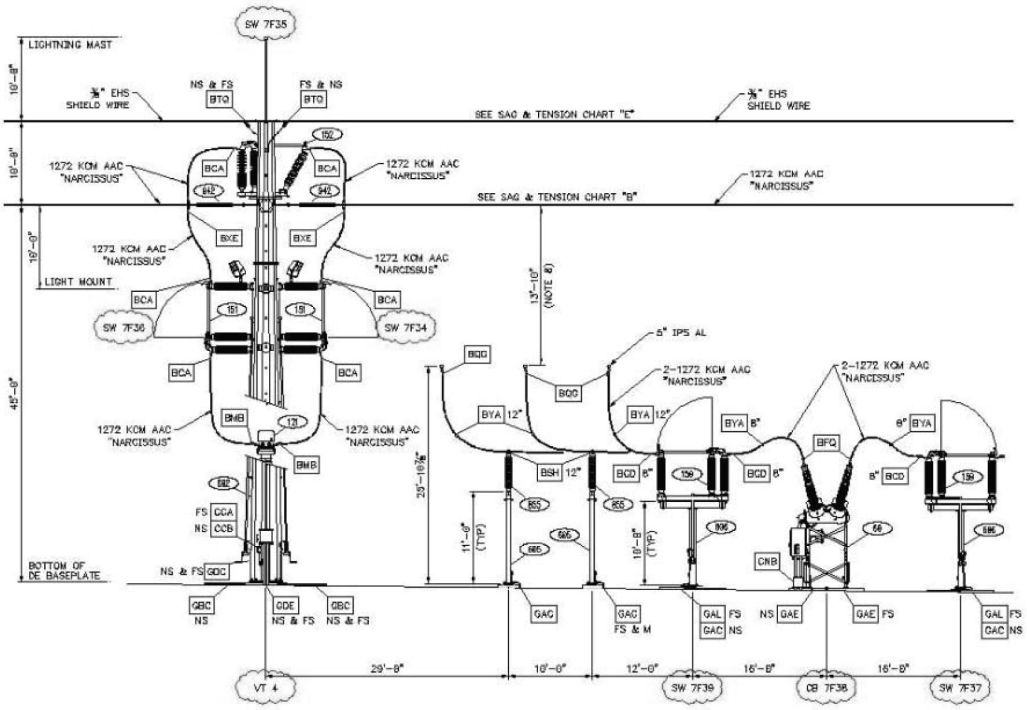

Figure 17—Labeling Breakers, Switches, and VTs

13.2.4. Matchlines and Brackets

Certain design situations, at the direction of the staff engineer, may allow the use of either matchlines or brackets. Separate matchlines shall be used (rather than brackets) on both the plan and the elevation drawings, where the facilities continue on another sheet. Brackets and text are used to reference the destination of transmission lines outside the substation.

Matchlines are not to be placed through equipment showing half on one sheet and half on the second sheet.

13.2.5. Dimensions and Text

Dimensions and text are added last with the appropriate DIM style for the scale of the viewport. If dimensions and text are added before the view is twisted, they will likely be upside-down, or read from the wrong direction.

Place dimensions and text by either dimensioning through the locked viewport or in modelspace. If the view is twisted through the viewport, then twist the view in modelspace to match the viewport.

Printed versions of this document may be out of date. Please consult the online engineering handbook for the most recent version.
This document shall be used and duplicated only in support of PacifiCorp projects. ©2017 by PacifiCorp.

13.3. Conduit & Cable Plan

The conduit & cable plan shall have the XB and XC Xref'd into the sheet file. Conduit & cable details are not part of the same drawing number series as the conduit plan. They will have their own drawing number starting at sheet one (.001).

The baselines of attached XREFs are to be frozen and replaced with the floating BASELINE CROPPED block with the dynamic ends pulled outside the fence.

The attributed circle block used to label the conduits on the conduit plan is called CND_NUMBER and is located on the conduit plan tab within the conduit palette. The block to be used, Figure 18, left, is smaller in size than the CABLENU block, Figure 18, right, used for panel layout and wiring drawings.

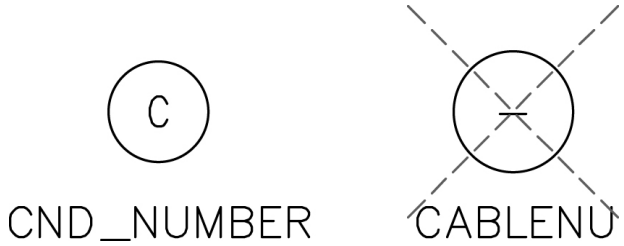

Figure 18—CND_Number and CABLENU

13.4. Grounding Plan

The grounding plan shall have the XB and XG XREF'ed into it to show the grounding mats, foundations, fence, gates, and cable trench. All other unnecessary layers of the XB shall be frozen.

The baselines of the attached XREFs are to be frozen and replaced with the floating "Baseline Cropped" block with the dynamic ends pulled outside the fence.

Grounding details are not part of the same drawing number series as the plan. They shall have their own drawing number, starting at sheet one (.001).

13.5. Lighting Plan

Lighting plans are comprised of the XB and a block named "FLOOD LT-PLAN" placed in areas of the yard, showing the direction of the light. The block does not reflect the type of light, but is a symbol of the light. The actual style of the light is shown in the XE file where it is XREF'ed in the plan view in various sheet files.

13.6. North Arrows and Scale Bars

1. North arrows are placed in the upper right-hand corner of the drawing in paperspace. If an existing drawing has the north arrow placed elsewhere, it should be relocated.
2. Scale bars shall be placed in the lower right-hand corner of the drawing and shall match the scale of the viewport.

Printed versions of this document may be out of date. Please consult the online engineering handbook for the most recent version.
This document shall be used and duplicated only in support of PacifiCorp projects. ©2017 by PacifiCorp.

3. Both the north arrow and scale bar are placed in the following drawings:

General Plan

Conduit & Cable Plan

Grounding Plan

Plan & Elevation

Lighting Plan

13.7. Vicinity Maps

Use the vicinity map template found on the standard palette to create a new map. Use match properties and the blocks found in this template.

When completing a new vicinity map, the finished map should be made into a block called, “(SUBSTATION NAME) VICINITY MAP,” so the forced entities are within the block, rather than loose in the file, and are not recognized or corrected by the audit routine.

13.8. Avian & Animal Enhancements

The AVIAN & ANIMAL ENHANCEMENTS document class is used to document and detail provisions for substation bird and animal protection (see company SV construction standards). "Avian & Animal Enhancements" drawings are under the electrical discipline. They should be given the last number in the drawing series.

The “Avian & Animal Enhancements” drawings use two drawing numbers, the first number is for PLANS & ELEVATIONS, which shall be listed on the fourth line of the title block.

After elevations, on the next drawing number, show the bus connection details, named "BUS CONNECTION DETAILS" as the fourth line.

In the plans & elevations drawings, display dimensions and phasing and remove all the other information that is normally shown. When necessary, matchlines or brackets should be used to show continuation on subsequent sheets. See " Matchlines and Brackets" on page 22, *Matchlines and Brackets*.

The legend should reference the avian & animal enhancement details, and should list which sheets contain details pertaining to the current construction. The notes should list information pertinent to the current construction. If necessary, the scale of the drawings may be increased to show more detail, however only to the point which the drawing will allow. The barriers and covers should all be shown in the ELEVATIONS and should be placed on the animal-enhancement layer. The details shown should be called out with the DETAIL-ID WITH QUANTITY block.

In the Details drawings, all the details pertaining to the current construction should be shown. The barriers and covers in these details will be placed on the animal-enhancement layer. List the items used to make the details with item callouts, which correspond to the Bill of Materials

Printed versions of this document may be out of date. Please consult the online engineering handbook for the most recent version.
This document shall be used and duplicated only in support of PacifiCorp projects. ©2017 by PacifiCorp.

and which are listed following the same method as other details. The avian & animal enhancement details will have an “A--” detail designation as shown in Figure 19.

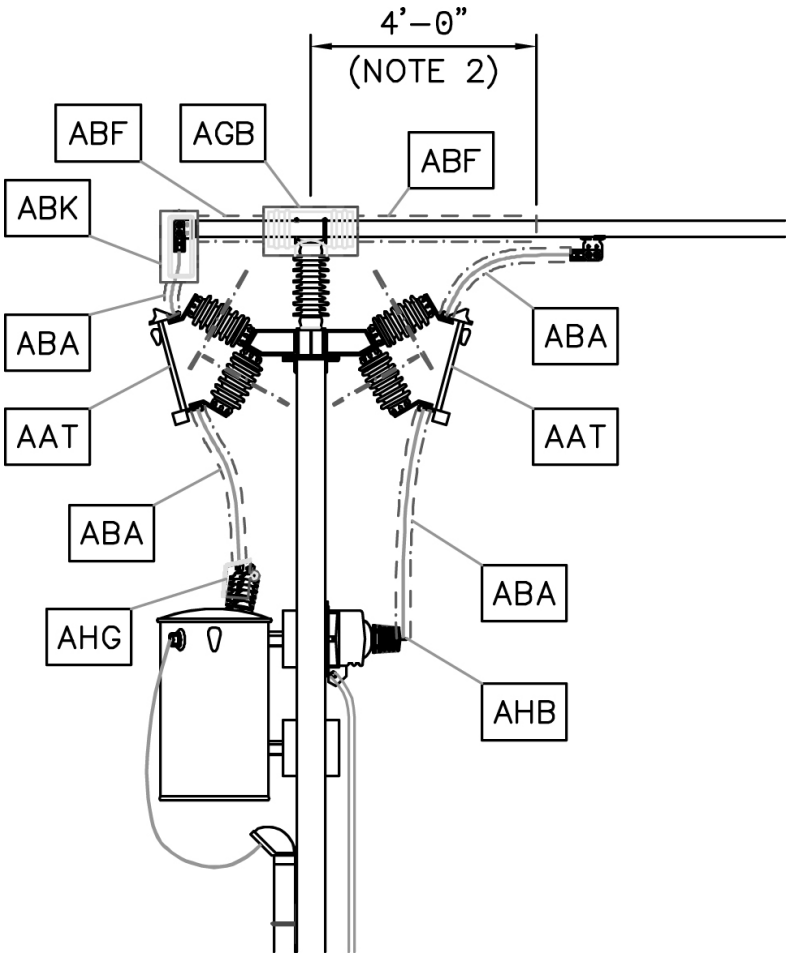

Figure 19—Animal Enhancement Details

14. Protection & Control Drawings

All wiring and schematic entities shall be placed in paperspace. There is an exception: when a .tif image is attached, all CAD entities except the notes, legends, tables and the title block are placed in modelspace with the image.

Standard drawings will come with design notes placed on a non-standard layer. The design notes are to be removed when the standard becomes a project. The design notes will be of a different color and will be italicized to distinguish them from the notes that remain in the drawing.

Printed versions of this document may be out of date. Please consult the online engineering handbook for the most recent version.
This document shall be used and duplicated only in support of PacifiCorp projects. ©2017 by PacifiCorp.

NOTES

1. BL, WH, RD, OR, BR AND GY ARE DEVICE 86T?-A LIGHTED NAMEPLATE'S 6 WIRE LEAD COLOR DESIGNATIONS. EACH WIRE LEAD HAS A RING TERMINAL AND IS CONNECTED TO DEVICE 86T's LETTER OR TB BLOCK AS SHOWN. REFER TO ELECTROSWITCH DRAWING #78PB10D FOR MORE DETAIL ON CONNECTION OF DEVICE 86T?-A.
2. 62BF C1 & C2 ARE NOT USED.
3. MANUFACTURERS CONNECTION.
4. NEW NEMAWC57/ICEA S-73-532 STANDARD REPLACED K2 COLOR CODE WITH E2.

TEMPORARY DESIGN NOTES (TO BE REMOVED)

1X. DEVICE 43SP/LL-?? QUESTION MARKS ARE REPLACED WITH THE PANEL NUMBER WHERE THE DEVICE IS MOUNTED (I.E. 43SP/LL-B4)

2X. CONDUCTOR QUANTITY AND WIRE SIZE TO BE REPLACED WITH CABLE NUMBER FROM THE CABLE AND CONDUIT LIST.

3X. CABLE TYPE AND LENGTH TO BE DETERMINED DEPENDING ON THE APPLICATION.

Figure 20—Standard Drawing Design Notes

14.1. Panel Layout & Wiring Drawings

1. As of this publication, on all new panel layout & wiring drawings, the panel will be shown on sheet 1 and the panel wiring will be shown on sheet 2 of the drawing series.
2. In legacy drawings, the panel within layout & wiring drawings is drawn 1:1 in modelspace and shown through a viewport with the wiring in paperspace.
3. The viewport is typically 1-1/2″=1′-0″ or 1:8, with a dimension scale of 8. Two DIM styles of 8 are created (one showing feet and inches and one showing only inches). The DIM style for a panel layout & wiring file is “8-IN,” which shows only inches. Modifying DIM styles to achieve the look of inches is not permitted.
4. Panel layout & wiring drawings typically display a nameplate list with the lengths and widths specified. The details of the nameplate legacy drawings will sometimes show dimensions, which should be removed to avoid discrepancies.
5. All text headings for equipment in panel layout & wiring drawings are to be 1/8″ in height as shown with “AB” in Figure 21.
6. All viewports shall be locked to avoid accidental changes.

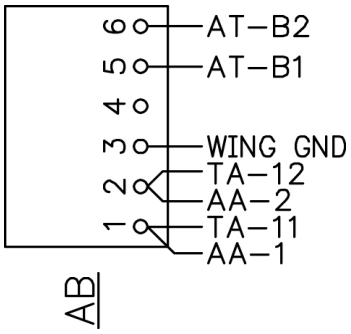

Figure 21—Text Headings

14.2. Schematic Drawings

All text headings above the equipment outlined with the dashed layer shall be 3/32″ in height as shown with “11A” in Figure 22.

Printed versions of this document may be out of date. Please consult the online engineering handbook for the most recent version.
This document shall be used and duplicated only in support of PacifiCorp projects. ©2017 by PacifiCorp.

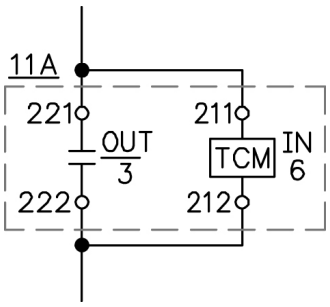

Figure 22—Schematic Drawings

14.3. Layers

All layers are taken from the wiring layers tab on the standard palette.

14.3.1. Yard Termination Cabinet Layer

Five template layers are included in our standard files for the yard termination cabinet. Layers YTC, NO_YTC, WVRT, NO_WVRT, and MCG are found in our standard files and are design options which lay over the top of each other.

1. Determine which of the five layers are used in your design.
2. Incorporate the layer (or entities of that layer) into the standard layer.
3. Place text on the text layer.
4. The remaining entities on the unused layers are purged.

   For example, if the no-YTC layer is used, then entities on the YTC and MCG layers are deleted and purged. The YTC and MCG layers are also deleted and purged.

   NOTE: If lines from the no-YTC layer are used rather than the terminal blocks from the YTC layer, the three lines between the two terminal blocks should be one continuous line and not comprised of three line segments. Achieve this by deleting two of the lines and extending one.

5. In the end, all five template layers are purged from the drawing after incorporating the elements into standard layers.

14.3.2. Bus Layer

The bus is drawn on the bus layer using a PLINE with a width of .03. Three-phase one line blocks associated with the bus are placed on the bus layer.

14.3.3. Logic

Logic is placed on layer zero.

Printed versions of this document may be out of date. Please consult the online engineering handbook for the most recent version.
This document shall be used and duplicated only in support of PacifiCorp projects. ©2017 by PacifiCorp.

14.3.4. Non-standard Key Sheet Layers

Non-standard layers shown in Figure 23, below are solely used by the standards group referring to other standard drawings. These layers are found in the standard one line diagram key sheet drawings. A note within (shown below) to the drafter/designer gives direction to remove and purge the layers and then delete the note and the table when the standard drawing becomes a project drawing.

```
NOTE TO DRAFTER/DESIGNER:
THE NON-STANDARD KEY SHEET LAYERS USED WITHIN THIS DRAWING
ARE FOR REFERENCE ONLY. PLEASE REMOVE AND PURGE THESE LAYERS,
THIS NOTE, AND THE REFERENCE TABLE WHEN THE FILE BECOMES
PROJECT SPECIFIC.
```

LAYER NAME	DRAWING TITLE
PC 230 A	LINE COMPENSATION, LINE REACTOR AND SINGLE POLE TRIP, EHV TRANSMISSION
PC 235 A	SINGLE POLE TRIP & W/O LINE COMPENSATION, EHV TRANSMISSION
PC 240 A	THREE POLE TRIP, EHV TRANSMISSION
PC 245 A	CURRENT DIFFERENTIAL, EHV TRANSMISSION
PE 150 A	EHV POWER XFMR, BREAKER AND A HALF/RING BUS CONNECTION
PE 153 A	EHV POWER XFMR, SECONDARY CONNECTED TO PHASE ANGLE XFMR
PE 160 A	EHV PHASE SHIFTING (ANGLE) TRANSFORMERS
PE 330 A	??KV, EHV BUS DIFFERENTIAL
PE 530 A	EHV SHUNT CAPACITORS
PE 630 A	EHV SHUNT REACTOR

Figure 23—Non-standard Key Sheet Layers

14.4. Text

Text within protection & control drawings shall be the standard width of 1. Text styles S1 through S8 should not be used unless they are necessary due to limited space.

The DTEXT shall be justified appropriately to the left, right, or center (ML, MR, or MC).

MTEXT justification shall be appropriate to the placement of the text in relation to the design with which it is associated, typically TL, TC, or TR.

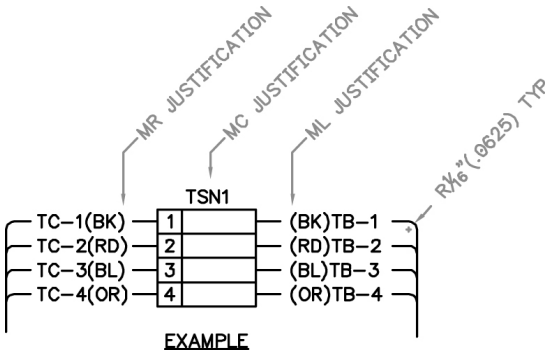

Figure 24—Justification, Left, Right, or Centered

Printed versions of this document may be out of date. Please consult the online engineering handbook for the most recent version.
This document shall be used and duplicated only in support of PacifiCorp projects. ©2017 by PacifiCorp.

14.5. OLE Objects

OLE objects within CAD files shall not be used. Some manufacturers' files may come with OLE objects, and these objects shall be embedded rather than linked.

14.6. Single Line Entities and Snap

Wiring is drawn using single line entities (rather than PLINES), with the radius for turning wire direction set to .0625 (1/16″).

If SNAP is used for placing wiring, blocks, and text, the SNAP should be set to a minimum value of .03125″ (1/32″), or multiples thereof.

14.7. Wiring Blocks

Wiring or protection and control blocks are created on layer 0 with attributes and text forced to color 7. No other layers are used within these blocks.

These blocks are to be inserted on layer 0 with the exception of one-line bus blocks, which are inserted on the BUS or FUTURE layers. In this scenario, the attributes or text will remain white while the other block entities will be the color of the layers.

Certain dynamic blocks used in current schematics and one line diagrams which have horizontal and vertical views may need to be physically rotated 90 degrees while using the flip actions to achieve the desired view of the attributes. The desired view is that the attributes are to be vertical and read from the right. For example, the horizontal view may be selected, and then rotated 90 degrees to a vertical position. The flip actions are then used to orient the attributes vertically. This is only to be done if the view cannot be achieved with a 0 rotation while using the flip actions. None of these blocks shall be modified, exploded or burst to achieve this. Please note that this is not for one line key sheet as the attributes are read horizontally, but may be necessary for one line drawings that follow the key sheet and for current schematics.

14.8. Wire Color Codes

Wire color codes are placed within parentheses and entered in the same text string as the terminal designation. See Figure 25 for the current color table, and Figure 26 for the proper text placement of wire color and terminal designation. The current color code block is found on the standard palette on the paperspace tab, i.e., W1 is shown as (BK).

Printed versions of this document may be out of date. Please consult the online engineering handbook for the most recent version.
This document shall be used and duplicated only in support of PacifiCorp projects. ©2017 by PacifiCorp.

WIRE/COLOR CODE CONVERSION CHART

COND NO.	K1 (C4)	K1 (C12)	K2
W1	FIELD TO SPECIFY SEQUENCE	FIELD TO SPECIFY SEQUENCE	BLACK (BK)
W2			RED (RD)
W3			BLUE (BL)
W4			ORANGE (OR)
W5			YELLOW (YL)
W6			BROWN (BR)
W7			RED/BLACK (RD/BK)
W8			BLUE/BLACK (BL/BK)
W9			ORANGE/BLACK (OR/BK)
W10			YELLOW/BLACK YL/BK)
W11			BROWN/BLACK (BR/BK
W12			BLACK/RED (BK/RD)

Figure 25—Current Wire Color Table

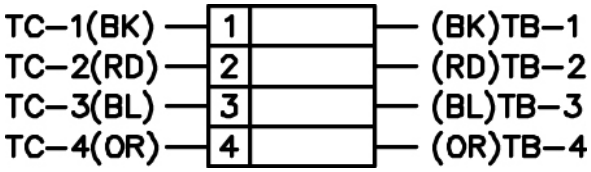

Figure 26—Proper Text Placement of Wire Color and Terminal Designation

This color code format within a single string of text is to be used in all modifications and on all text strings in rev zero drawings. The wire color is to be within parentheses and placed closest to the terminal block, as shown.

15. XREF Documents

XREFs are externally referenced files. For general XREF procedures, refer to Handbook Volume 9A.5, section 6, *External Reference Drawings*. The following XREF procedures are specific to substation drawings.

Printed versions of this document may be out of date. Please consult the online engineering handbook for the most recent version.
This document shall be used and duplicated only in support of PacifiCorp projects. ©2017 by PacifiCorp.

15.1. XREF File Naming Conventions

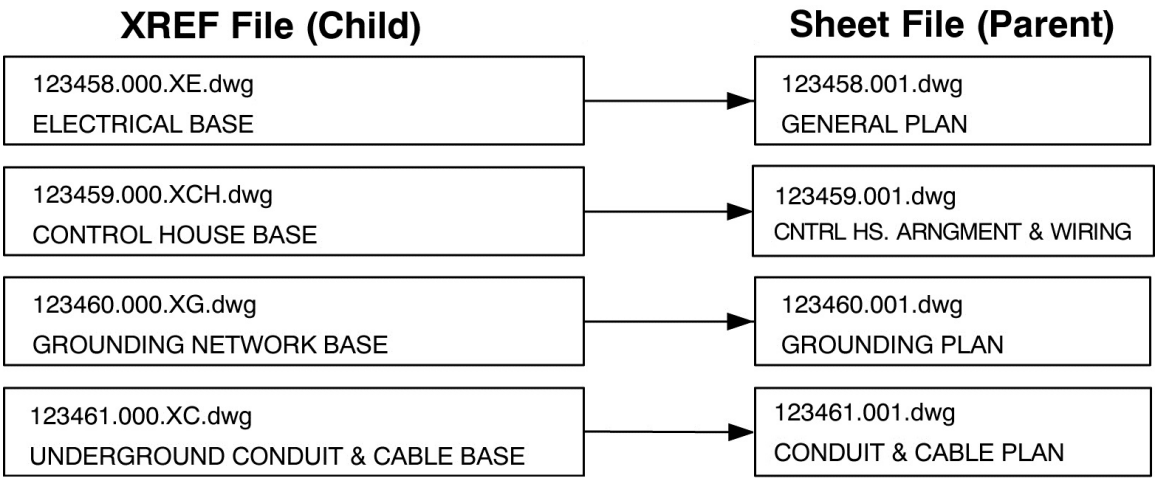

Figure 27—XREF File Name Translation

New XREF files tied to legacy file names can be created with an appropriate sheet file name. For example, if an XE does not exist, and one is created, the file name of the XE would take on the 5-digit file name of the existing general plan, i.e., 12345A01 = 12345A00.XE. (This new XE would not take on the current 6-digit file naming convention, for example 123456.000.XE.)

If XREFs do not exist for existing substations and a project begins to develop an electrical base plan, those modifications will become the new XE XREF. For example, if a new bay of equipment is added, then that will become the XE and effort should be made to incorporate the existing electrical entities into the XE by placing them in the new XREF file.

16. Excel Files

Standard Excel template files are located in the forms directory within the ...\AutoCad Support\ directory.

When modifying existing Excel files, update the old PacifiCorp logo (with the three blue diamonds) with the new logo found in the forms directory. The new logo has a taller height. The only file types that do not accommodate the new logo are legacy conduit & cable lists.

Figure 28—Old PacifiCorp Logo **Figure 29—New PacifiCorp Logo**

To accommodate the new logo, the two bottom row heights shall be changed from 23 to 33 as shown below. Do this for the entire length of two rows, then paste and center the new logo.

Printed versions of this document may be out of date. Please consult the online engineering handbook for the most recent version.
This document shall be used and duplicated only in support of PacifiCorp projects. ©2017 by PacifiCorp.

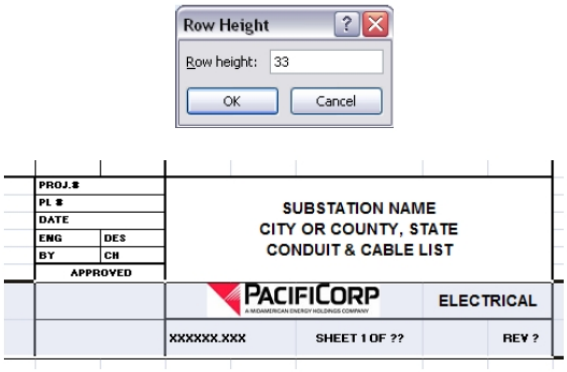

Figure 30—Adjusting Row Height to Accommodate Current Logo Height

All modifications are shown with the cell highlighted with light green. Highlighting of previous modifications is removed.

Tabbed Excel files area to be numbered through page setup starting with the second tab. Shown below in Figure 31 are examples of a file using two tabs with the page number starting with 2.

16.1. Cable List

This file was previously named conduit & cable list. Its only reference to conduit will be the conduit number. The cable list will be accompanied by a separate AutoCAD file called "Conduit Schedule," which will list the remaining conduit information and have reference to the cable number from the cable list. New rev 0 cable lists will use the cable list template located in the ...\AutoCad Support\FORMS\ directory. The cable list will have reference to the conduit number taken from the conduit schedule and placed in the appropriate "In Conduits(s)" column.

1. When an existing conduit & cable list is checked out for modification, the new conduit information is placed within:

   a. An existing conduit schedule, if one exists

   b. If one does not exist, then an AutoCAD conduit schedule template file is used, and is assigned a drawing number. The drawing number will always be the last number in a new or existing conduit plan drawing series. This template file is located in the ...\AutoCAD Support\Templates\Substation\ directory.

2. The legacy conduit & cable list will be modified as follows:

   a. The header of the legacy conduit & cable list will be corrected to read "Cable List."

   b. The PacifiCorp logo, if need be, is replaced with the new logo.

   c. The conduit number for new work shown in the conduit schedule will be placed in the remarks column in the cable list.

Printed versions of this document may be out of date. Please consult the online engineering handbook for the most recent version.
This document shall be used and duplicated only in support of PacifiCorp projects. ©2017 by PacifiCorp.

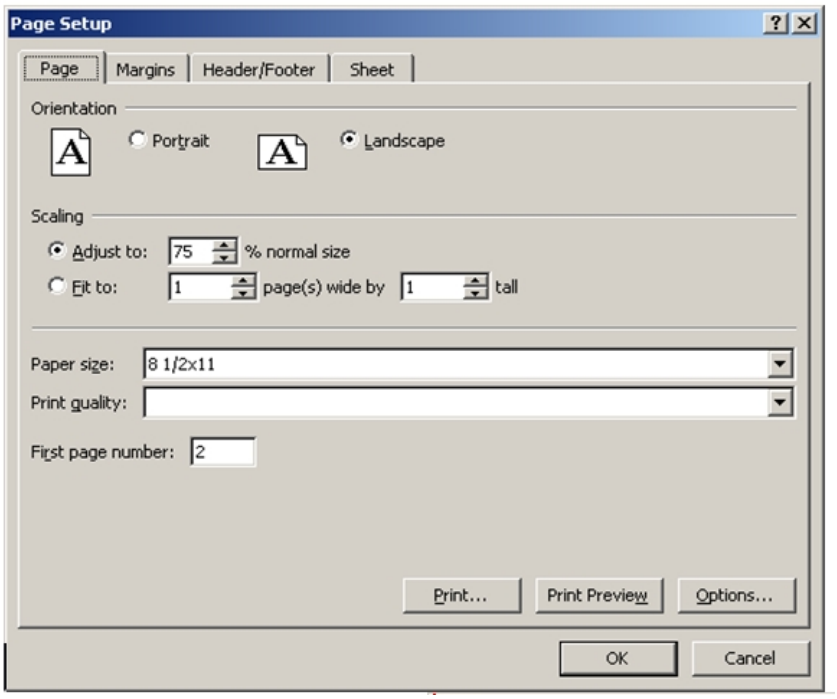

Figure 31—Multiple File Tabs Using Two Tabs

Template files are set up with the first page number filled in, and once the numbers of pages in each tab are determined, these may need to be adjusted. The total number of pages is entered in the footer and the title block of the first tab.

In the footer of each tab, the [Page] is automatically taken from what is entered in the first page number field shown in Figure 31, and the number of sheets is entered manually, as is the revision number.

Printed versions of this document may be out of date. Please consult the online engineering handbook for the most recent version.
This document shall be used and duplicated only in support of PacifiCorp projects. ©2017 by PacifiCorp.

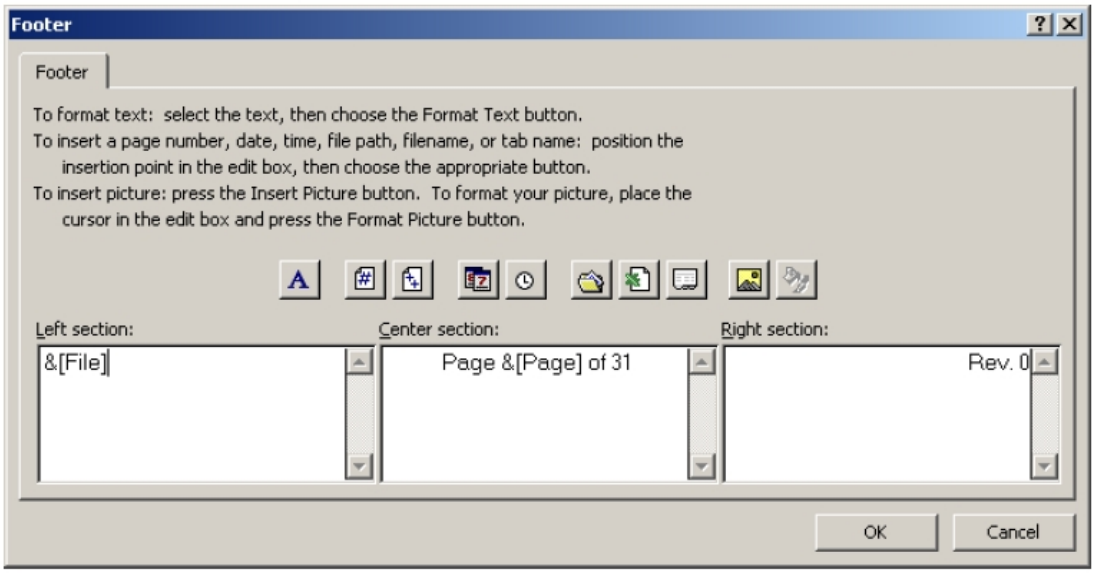

Figure 32—Footer Formatting

17. Handbook Issuing Department

The engineering standards and technical services department of the company published this document. Questions regarding editing, revision history and document output may be directed to the lead editor at eampub@pacificorp.com. Technical questions and comments may be directed to substation engineering. This handbook document shall be used and duplicated only in support of company projects.

Printed versions of this document may be out of date. Please consult the online engineering handbook for the most recent version.
This document shall be used and duplicated only in support of PacifiCorp projects. ©2017 by PacifiCorp.

9B.3—Civil Drafting Standards

1. Scope

This section of the company's Engineering Handbook provides civil discipline-specific drafting and design standards. For an overview of general company drafting standards, see Engineering Handbook Volume 9A, *Computer-Aided Design*. Also see company Engineering Documentation Policy 206, *Civil Drawing Expectations for Consultants*.

2. General Drafting Practices

The following general drafting practices are standard for civil drawings. Adhering to these procedures ensures conformity to standards set forth by civil engineering.

1. All plan views shall be drawn to scale, and details shall be drawn to scale whenever possible. If a detail cannot be drawn to scale the subtitle shall indicate that no scale is used (see Section 3.3).
2. QC audits shall be run as early as possible to support correct practices in CAD standards. These audits include, but are not limited to:

   a. Using the PacifiCorp AutoCAD templates when creating a drawing.

   b. Creating and developing a drawing per the narratives and intended use of the PacifiCorp templates.

   c. Verify that all objects are put on the appropriate layers and that they are by layer.

   d. A CAD standards check (found in the tools pull-down menu in the CORP-C3D.dws template file)

   e. The FX command (never on grading plans or topographic surveys).

   f. A purge of finalized drawings or projects

   g. A BAD audit tool self-audit (prior to the issuing of the package).
3. Leaders shall be MLEADERS (unexploded) in all new drawings, and shall be placed on appropriate text layers. If leaders are added to old drawings they shall match the leader type of that existing drawing.
4. When ARC leaders are used, they shall be placed by using the ppg.lsp for modelspace and pp1.lsp for paperspace. The correct DIM style for the scale of the viewport must be current prior to using the ppg.lsp for leaders in modelspace. If the viewport scale changes, then the leaders shall be redrawn such that the arrowhead is properly scaled.
5. Texts associated with dimensions shall be placed within the dimension via the text editor and not floating outside near the dimension.
6. Notes in drawings with more than one string of text shall be either MTEXT or MLEADER without the leaders, and shall be placed on an appropriate text layer.

Printed versions of this standard may be out of date. Please consult the online standards for the most recent version.
©2016 by PacifiCorp Engineering Publications.

2.1. Tabbed Drawings

A tabbed drawing file name shall have the suffix ".000" which indicates the file has multiple sheets. Tabbed drawings shall have the layout tab named to match the sheet number, i.e., .001, .002, & .003.

TIF files added to a tabbed file shall have the same name as the drawing, i.e., 123456.000.tif. If there are multiple .tif files, the .tifs can be merged together within the image frame of one file by using "raster design." Refer to PacifiCorp Engineering Handbook 9A, Section 7.1, *Hybrid Drawings* for merging multiple images.

Multiple paperspace layouts within one file are only to be used with certain civil, structural, and foundation drawings. Although this is a useful tool for multiple sheets within a single drawing number, the company still documents, manages, revises and issues each sheet individually; therefore, the following requirements apply to the files stored in PacifiCorp's Document Manager for Power Delivery. As stated in 9A.2, Section 7, *Drawing Numbers*, multi-page documents shall have the suffix 000 (or A00 if the drawing is derived from a legacy file name).

- Multi-layout drawings are only to be used within a single drawing number. For example, file number 123456.000.dwg should only contain layouts labeled with the sheet number (e.g., .001, .002, .003, etc.).
- Each layout within a drawing shall be rendered to its own individual PDF file for indexing, viewing, and plotting in DM. PDFs shall only be rendered for the layout tab that was modified. PDFs shall accompany the drawing file when returned to document control to be renditioned to the in-house data management system, P8.
- Multiple layout drawings shall not exceed a 10 MB file size. Multiple layout drawings are only acceptable for civil, structural, and foundation drawings.
- When creating a new layout tab within a drawing, utilize the LAYOUT FORM TEMPLATE feature from the layouts toolbar, or from the insert pull-down: layouts>layout form template.
- The existing template files are located at AutoCAD Support\Templates.
- Follow the standard procedure pertaining to modelspace/paperspace drawing files as described in 9A.5, Section 4.

3. Drawing Components

3.1. Contours

All major contours shall be labeled with text on their associated CONTOUR layer. While minor contours are typically unlabeled, labeling may be preferable when a major contour is not present, or where labeling adds clarity to the plan. Existing and proposed contours shall be on separate layers per the CORP-3D template in order to distinguish between them, and shall be created with CORP-3D using the appropriate styles preset in the template.

Printed versions of this standard may be out of date. Please consult the online standards for the most recent version.
©2016 by PacifiCorp Engineering Publications.

3.2. DIM Styles and Text

The civil department uses specific dimension layers with a prefix of “C-” taken from the civil palette or from the CORP-3D template. Civil DIM style units shall be either “architectural” or “decimal.” Grading and survey plans use the “decimal” annotative DIM style (except for details, which can use an “architectural” DIM style) while all other drawings use the “architectural” DIM style. All existing civil drawings maintain their dimension styles, while the latest DIM styles can be used for new dimensions as follows:

1. Texts added to dimensions shall be entered via the text editor. Certain lines of text shall be placed beneath the dimension line by entering “\X” (CAPS must be on) between the dimension value and the string of text.

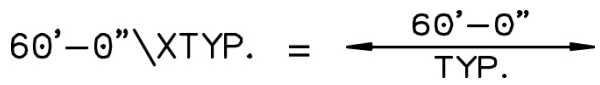

Figure 1—Placing Text Below Dimension Line (Example)

2. Dimensions may have the dimension value overwritten to represent X & Y values for various lengths, widths, or heights, as denoted in charts such as in the concrete and reinforcing charts.
3. Dimensions shall be set such that the arrowheads do not overlap as shown in Figure 2.

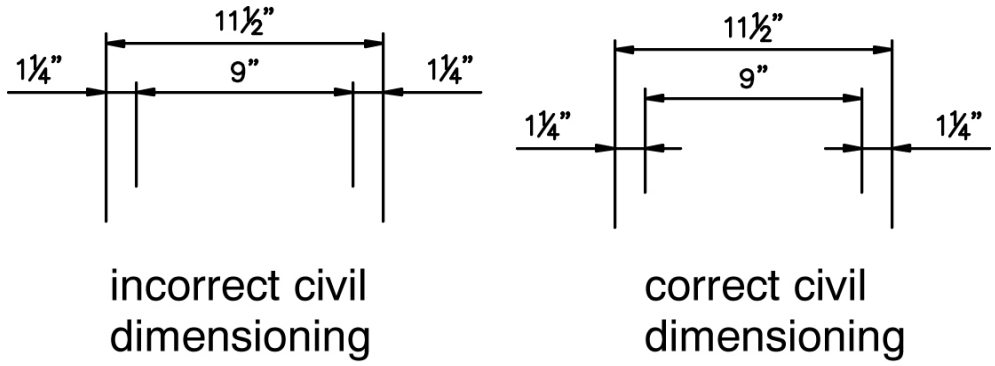

Figure 2—Civil Dimensioning

3.3. Drawing Scale

Drawing scales entered in the title blocks for decimal-unit drawings, shall be written: 1″ = 20′ rather than 1″ = 20′-0″. There shall be no spaces between the = sign and the -0″ shall not be used.

Scales of multiple viewports shall be noted using the SUB TITLE block. Place this beneath each detail in the model or paperspace environment where the detail is located. “AS NOTED” shall then be entered in the scale on the title block.

Printed versions of this standard may be out of date. Please consult the online standards for the most recent version.
©2016 by PacifiCorp Engineering Publications.

Details that don't have a scale (when shared on the same drawing as other details that have a scale) shall be noted using the same SUB TITLE block, with "NTS" entered in place of a scale.

If all the details on the drawing have no scale, do not enter scale information beneath each detail. Only the title block shall note that the drawing scale is "NONE." If all details have common scales, the scale shall only be noted in the title block and not beneath each detail.

Acceptable scale notations within the title block shall be:

1. "AS NOTED"
2. "NONE"
3. Or a valid scale using the appropriate ACSI codes found in the Volume 9A.

Acceptable scale notations within the title block shall not be:

1. "AS SHOWN"
2. "NTS"
3. "N.T.S."

3.4. Drawing Units

Drawing units shall be "architectural" for all drawings except the grading plan and surveys that shall have drawing units set as follows:

1. INSERTION SCALE = "feet"
2. LENGTH TYPE = "decimal"
3. LENGTH PRECISION = "0.0000"
4. ANGLE TYPE = "surveyor's units"
5. ANGLE PRECISION = "N 0d00'00" E"

NOTE: When set in surveyor's units, the ANGLE TYPE displays in deg/min/sec. and also lists the bearing of a line. Angles will still display in deg/min/sec.

Printed versions of this standard may be out of date. Please consult the online standards for the most recent version.
©2016 by PacifiCorp Engineering Publications.

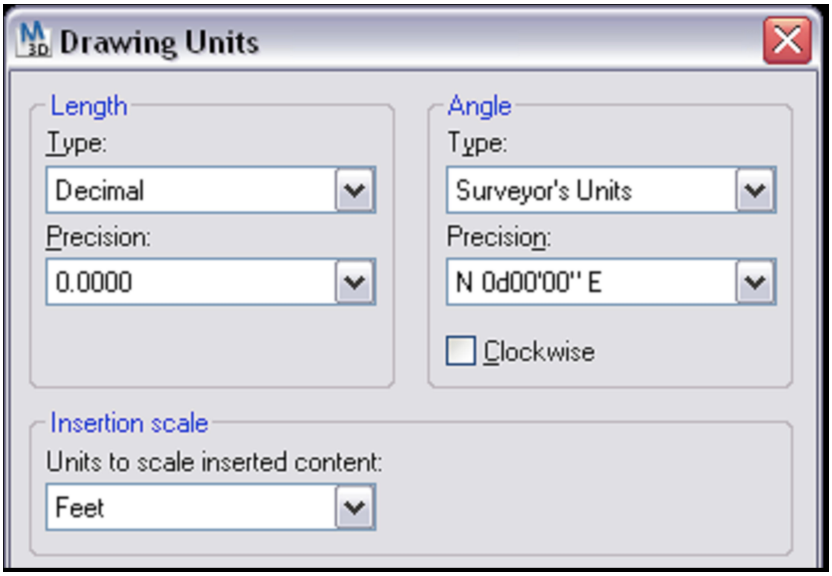

Figure 3—Drawing Units for Grading Plans and Survey Plans

3.5. HATCH Layers

Only HATCH layers taken from the civil palette, the CORP-C3D template file (having 'HTCH' OR 'PATT' within the layer name) shall be used. These layers shall not be modified, nor shall new layers be created.

3.6. Paperspace / Modelspace for Civil Design

To begin a new drawing, select the most appropriate template from ...\AutoCAD support\templates\ directory, containing most of the required layers, text styles, and base dimension styles. These procedures shall be followed to utilize paperspace / modelspace:

1. Create all drawing content at 1:1 scale in modelspace.
2. Create viewports in paperspace (floating viewports) as needed to view the contents of modelspace. Place the viewports on the DEFPOINTS layer.
3. Set the PSLTSCALE variable to 1 and the LTSCALE to 0.25 such that the line types will look identical in all viewports. The CORP-C3D template already has these variables set.
4. General notes, title block, legends, and bills of material, shall be created in paperspace. The CORP-C3D template also contains procedure notes to assist the user, to outline the company's plan creation and delivery requirements, and to explain the intended use of the template. When using the proper template drawings, the company border already resides in paperspace. If a border does not exist, insert the appropriate border block as described in Engineering Handbook. 9A.2, *Borders*.
5. Plan views in paperspace shall be oriented to coordinate with the General Plan in order to avoid confusion throughout the project. When creating a new drawing where the

Printed versions of this standard may be out of date. Please consult the online standards for the most recent version.
©2016 by PacifiCorp Engineering Publications.

orientation of the plan view has not been previously established, the north arrow shall comply with national drafting standards and the north arrow shall point upward toward the northern quadrants.

6. Viewports shall be locked so that the scale and scope of the viewports do not change.
7. Create all details at 1:1 in modelspace. However, if the detail's scale differs from the primary drawing scale, use the following procedures:
   a. Show the detail in paperspace through its own viewport with the appropriate scale. Use the SUB TITLE block (found on the standard palette) to place the scale beneath it.
   b. See Section 3.3 if multiple details with the same scale are shown on a sheet and there are no other details on the sheet with a different scale.
   c. See Section 3.3 if multiple details with different scales are shown on a sheet.
8. Blocks, hatches, MLEADERS, MTEXTS and dimensions shall be annotative in the modelspace of grading plans and set to the scale of each viewport that those items will be viewed.

3.7. Scale Bars

Scale bars for civil drawings shall be taken from the civil palette or the CORP-C3D template. Scale bars shall only be used for plan views. They shall match the scale of the viewport and the title block.

3.8. XB (External Reference) Base Outline

The XB shall be XREF'ed into all plan sheets, for example: in the grading plan, fence plan, foundation plan, and cable trench plan.

The naming of the XB file shall follow the same 5- or 6-digit prefix used for the foundation plan with a suffix of .000.XB, or the legacy name followed by A00.XB, or S00.XB.

In the "units dialog" box, set "length type" to "architectural" and the "insertion scale" to "inches."

NOTE: With the exception of the grading and survey drawings, all other drawings that have the XB inserted shall have the units set to "architectural" and the insertion scale set to "inches."

If XREFs do not exist for existing substations and a project begins to develop a base plan, those modifications will become the new XB XREF. For example the foundations will become the XB and effort will be made to extract existing entities that belong to the XB such as:

- Foundations
- Fence
- Property lines
- Roads

Printed versions of this standard may be out of date. Please consult the online standards for the most recent version.
©2016 by PacifiCorp Engineering Publications.

These XREFs will follow the criteria in 9A.5, Section 6.2, *Building the XREF File*, which includes baselines (if the location is known). The insertion point will be at 0,0 and at the intersection of baseline.

3.9. Demolition Drawings

The drawing to be demolished shall be copied or "saved-as" with the word "DEMO" placed in front of the existing file name to prevent overwriting the original drawing file, e.g., DEMO-123456.001.dwg. Likewise, the drawing name in the title block shall have the word "DEMO" placed as a prefix, e.g., DEMO-123456.001.

When plotting demo drawings, the paper plot shall be stamped "FOR REFERENCE" in the lower right-hand corner of the drawing, as space allows.

The original drawing 123456.001 shall show the proposed design changes and shall be revved up. Drawings shall never be revved backwards to revision zero.

If an entire substation is being replaced or demolished, every drawing or document associated with the substation shall be voided. Within the void stamp block, "SUBSTATION REMOVED" (attribute tag #3) shall be entered, followed by the year. See 9A.4, Section 3.7.1 and 3.7.2 on voiding CAD and image files.

The title block in XB files shall be the Foundation discipline, and have the fourth line (attribute tag #6) read “BASE DRAWING,” and the third line (attribute tag #5) read “XREF.”

The components that primarily make up the XB are:

1. Baselines
2. Fences
3. Gates
4. Roads
5. Property lines
6. Foundations
7. Cable trench
8. Grounding mats

The XB file will not contain:

1. Text
2. Dimensions
3. or any above or below ground electrical facilities

Baselines shall run through the site placed in a north/south and east/west direction and shall avoid crossing foundations. The end of the baselines shall terminate 3′ inside the fenced yard where monuments shall be set as control points.

Printed versions of this standard may be out of date. Please consult the online standards for the most recent version.
©2016 by PacifiCorp Engineering Publications.

Design changes while creating an XB in a new substation may require that the placement of the baseline be adjusted during design or in creating the as-built. Baselines cannot be moved on existing substations or XB files after these processes because all drawings that reference the XB file will be affected. The intersection of the baselines in the XB shall always remain at 0,0.

4. Fence Plan and Fence Plan Detail Drawing

Fence plans and details are derived from the standard SR001 and SR002 template drawings. Fence plans and details differ from grading plans (which uses decimal units, decimal scale bars or decimal dimension styles). Unnecessary details from these templates shall be deleted when creating these drawings.

An overall plan of the fence is included, detailing the fence and gate locations measured from the base lines. The plan base (XB) shall be XREF'ed and attached at 0,0 with a scale of 1 (not with a scale of 12 or .08333).

The substation's sign placement shall be covered in the material and fabrication notes on the first sheet.

EXAMPLE: Rather than physically placing all the signs every 65′ along the fence, place one at a fence corner for pictorial representation while referring additional placements in the note. Turn off all foundations in the XREF.

5. Foundation Drawing

5.1. Creating New Foundation Drawings

To ensure the preservation of construction notes and history (rather than merging them to the new drawing), existing foundation drawings shall be retained, and not voided. Notes shall be placed in both the existing and the new drawing that refer to each other. Check out the legacy drawing, REV it up, and place notes that read as follows:

On the legacy drawing: "REFER TO DRAWING #123456.001, REV (#), DATE(MM/DD/YY) FOR ADDITIONAL FOUNDATION DESIGN."

On the new drawing: "REFER TO DRAWING #12345A01, REV (#), DATE (MM/DD/YY) FOR PAST FOUNDATION DESIGN."

5.2. Foundation Key Designators

Foundation key designators are typically letters, but may in some cases be alpha-numeric. These designators follow a process similar to that used in structural drawings. They do not, however, inherit any part of the drawing number.

Whenever possible, the HEX block designator shall be placed outside the fenced yard between the foundation centerline and the dimensions. The HEX block shall be taken from the civil palette, and shall be aligned at an equal distance from the fence.

Printed versions of this standard may be out of date. Please consult the online standards for the most recent version.
©2016 by PacifiCorp Engineering Publications.

NOTE: For foundations within the yard where the designators cannot be placed outside the fence, place designators near the foundation with an arced leader. For consistency, arced leaders shall be similar in size and curvature. MLEADERS may also be used.

The foundation detail key shall be placed in paperspace in the upper right-hand corner against the title block border. The key block shall be taken from the AutoCAD civil palette, on the “Notes & Tables” tab.

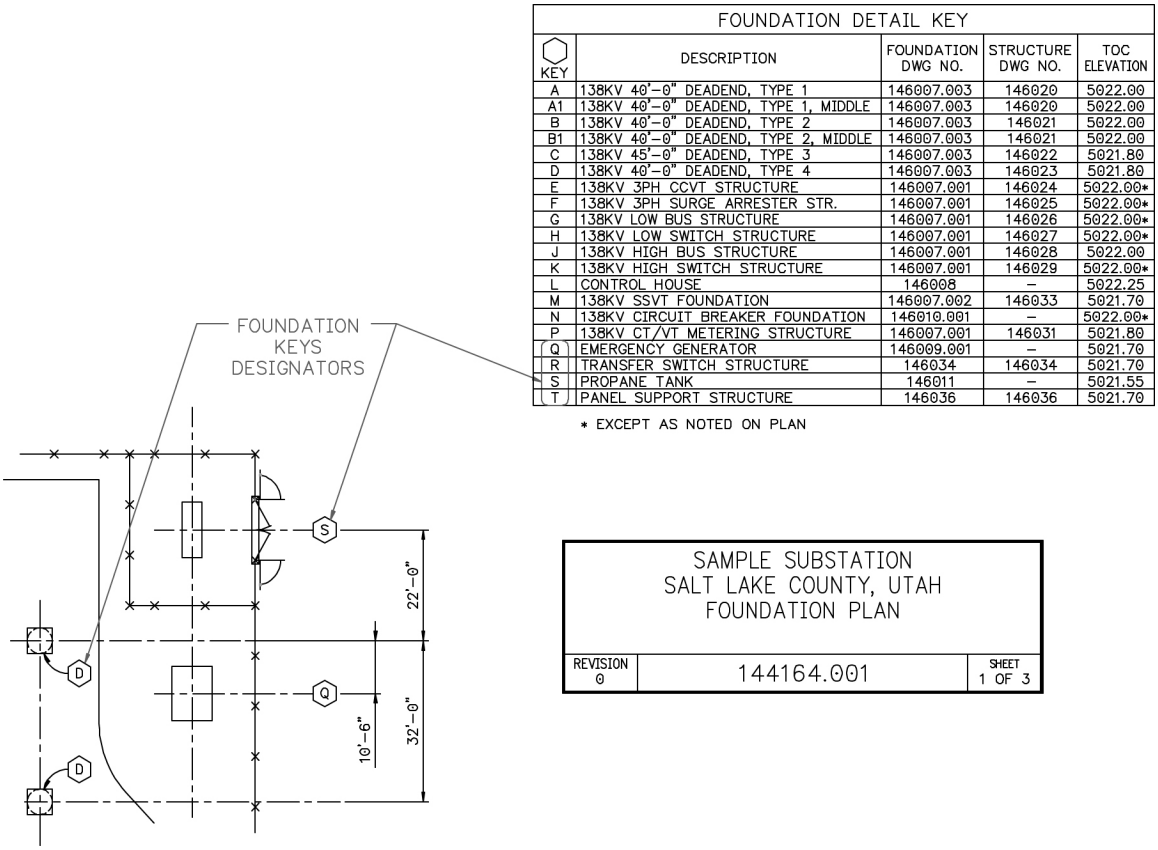

FOUNDATION DETAIL KEY

KEY	DESCRIPTION	FOUNDATION DWG NO.	STRUCTURE DWG NO.	TOC ELEVATION
A	138KV 40'-0" DEADEND, TYPE 1	146007.003	146020	5022.00
A1	138KV 40'-0" DEADEND, TYPE 1, MIDDLE	146007.003	146020	5022.00
B	138KV 40'-0" DEADEND, TYPE 2	146007.003	146021	5022.00
B1	138KV 40'-0" DEADEND, TYPE 2, MIDDLE	146007.003	146021	5022.00
C	138KV 45'-0" DEADEND, TYPE 3	146007.003	146022	5021.80
D	138KV 40'-0" DEADEND, TYPE 4	146007.003	146023	5021.80
E	138KV 3PH CCVT STRUCTURE	146007.001	146024	5022.00*
F	138KV 3PH SURGE ARRESTER STR.	146007.001	146025	5022.00*
G	138KV LOW BUS STRUCTURE	146007.001	146026	5022.00*
H	138KV LOW SWITCH STRUCTURE	146007.001	146027	5022.00*
J	138KV HIGH BUS STRUCTURE	146007.001	146028	5022.00
K	138KV HIGH SWITCH STRUCTURE	146007.001	146029	5022.00*
L	CONTROL HOUSE	146008	–	5022.25
M	138KV SSVT FOUNDATION	146007.002	146033	5021.70
N	138KV CIRCUIT BREAKER FOUNDATION	146010.001	–	5022.00*
P	138KV CT/VT METERING STRUCTURE	146007.001	146031	5021.80
Q	EMERGENCY GENERATOR	146009.001	–	5021.70
R	TRANSFER SWITCH STRUCTURE	146034	146034	5021.70
S	PROPANE TANK	146011	–	5021.55
T	PANEL SUPPORT STRUCTURE	146036	146036	5021.70

* EXCEPT AS NOTED ON PLAN

Figure 4—Placement of Foundation Key Designators

5.3. XREFs in Foundation Drawings

The XB base file shall be the only XREF attached to the foundation plan. It shall always be inserted at 0,0,0, on the XREF layer. The XB shall never be rotated.

6. Topographic Survey Drawing

6.1. Creating Drawings for the Company (For Surveyors)

All surveyors shall use the CORP-C3D template and shall download survey data into the CORP-C3D template. All points and line work in the CORP-C3D template shall be on the template layers; no other layers shall be created without company approval.

Printed versions of this standard may be out of date. Please consult the online standards for the most recent version.
©2016 by PacifiCorp Engineering Publications.

The existing grade (EG) surface shall be created in the Prospector, and shall be intact when the CAD file is delivered to civil engineering. The CORP-C3D template includes notes to assist the surveyor, to outline the company's plan creation and delivery requirements, and to explain the intended use of the template. The surveyor shall provide all of the information that is required by the Survey Scope of Work.

6.1.1. General Requirements

Entities shall be drawn at 1:1 scale and oriented to true north, so that the drawing coordinates for any point will match the final record survey coordinates. Text height shall be 3/32″ in paperspace, except for titles.

Surfaces, contours, profiles, etc., shall be developed in the Civil 3D Prospector using the company styles.

NOTE: If created with an earlier version of AutoCAD, contours can be polylines with elevations, on approved PacifiCorp layers.

6.1.2. Layering Conventions

All company layering conventions shall be used. Points, line work, breaklines, surfaces, profiles, symbols, text, dimensions, etc., shall be on their intended and designated layers (point descriptor code-dependent).

NOTE: If AutoCAD Civil 3D is not used, company layering conventions, noted above, is still required. If an earlier version of AutoCAD is used by the surveyor, contact the company to have the template saved for that version.

6.1.3. Borders and Title Blocks

The company border shall not be modified or exploded upon insertion. All shape files, text files, symbols, etc. shall be provided by the company. No external vendor specific shape files (*.shp or *.shx) shall be used. Surveyor's logos may be inserted into the drawing as a block near the title block.

The surveyor title block may be provided in paperspace, inside the rectangular boundary provided. The company border and title block shall be removed so as not to compromise the intended scale of the survey when the surveyor's .tif drawing is re-inserted into the PacifiCorp border by the company.

6.1.4. Surveyor Drawing Package Requirements

The civil software and version shall be clearly documented, i.e., "AutoCAD Civil 3D Release 2014." The following elements shall be included in the drawing package for submission to the company:

1. Captured point data used to create the final TIN or surface
2. The existing grade (EG) surface model, if created in Civil 3D within the company template, with the grading model information intact
3. The text (.txt) point file

Printed versions of this standard may be out of date. Please consult the online standards for the most recent version.
©2016 by PacifiCorp Engineering Publications.

4. All objects used to build the existing surface (such as 3D polylines, breaklines, points, etc.)
5. All contour information (polylines with elevations) generated by AutoCAD
6. An exported XML file of the points and EG surface
7. All the information required by the Survey Scope of Work.

See Section 8 of this document for more details on the CORP-C3D template.

6.1.5. Surveyor Notes Instructions

1. Use the coordinate system required by the Survey Scope of Work, i.e., UTM NAD 83 Datum.
2. The coordinates shown on the survey shall be the ground coordinates.
3. Specify the grid-to-ground scale factor in a note.
4. Specify the control point that was used as a base point when converting from grid-to-ground coordinates. Use a base point near or central to the point group.
5. A coordinate system shall be specified in the 'Units and Zone' tab in the drawing settings. The drawing settings can be found in Toolspace \ Settings \ right-click on the drawing name \ edit drawing settings.
6. A grid scale factor must be specified in the transformation tab. The grid scale factor can also be found or specified in the drawing settings.
7. The reference point must be specified in the drawing settings in the transformation tab.
8. The depth (or invert) elevation must be shown in the point description.

While working with the CORP-C3D template, the surveyor shall observe the following procedure:

1. Place survey data in modelspace using the required coordinates.
2. Delete the PacifiCorp title block in paperspace.
3. Fit the final survey inside the rectangle that remains inside the company's title block, including the surveyor's own title block, stamp, and company information.
4. After receiving it from the surveyor, the company will insert the final survey .tif image, including the surveyor's title block, inside the PacifiCorp title block.
5. The survey plan will be used as the record survey when completed. The CAD file shall be returned to the company (with all company conventions intact), with a PDF copy bearing the surveyor's stamp.

Printed versions of this standard may be out of date. Please consult the online standards for the most recent version.
©2016 by PacifiCorp Engineering Publications.

6.1.6. Submission to the Company

A company AutoCAD template shall be supplied to the surveyor, and shall be returned to the company with the conventions intact. These conventions include company styles, layering system, linetypes, dimension styles, text styles, blocks, etc. Other conventions shall not be accepted without pre-approval.

Surveyors shall furnish on a CD (or via email) a drawing file that can be used in AutoCAD Civil 3D, version 2014. An alternate version of AutoCAD Civil 3D may be used to create the existing surface model if pre-approved by a company representative.

The final deliverable shall include the following:

1. A stamped topographic survey drawing in AutoCAD and a PDF
2. All associated AutoCAD files and directory folders
3. Survey coordinate data in text (.txt) file format (point, north, east, elevation, description), and an .xml file that contains the survey data
4. Descriptor code legend, and a hard copy of all supporting information including field notes, and sketches
5. Any digital photography in ".jpg" file format with an accompanying photo log.

Digital data shall be delivered and included with any and all hard copy information.

6.2. Creating Drawings (From Surveyor's Files)

To create a topographical drawing from a surveyor's file, the file is saved with a company drawing number. Entities in modelspace shall remain in their original coordinates. These steps shall then be followed:

1. Create a new LAYOUT tab and move it to the front, as the first tab.
2. Insert the PacifiCorp border.
3. Convert the PDF file received from the surveyor to a .tif.
4. Assign the .tif the same drawing number as the new topographic survey drawing (e.g., 123456.000.tif).
5. Insert the .tif into modelspace.
6. On the leading layout tab, create a viewport and place the .tif (which is in modelspace) within the PacifiCorp border.

NOTE: The surveyor's title block should fit inside the viewport at the right scale. If the .tif does not fit in the viewport at its original scale, have the surveyor revise their survey plan so that it will fit. The scale of the survey shall not be altered.

7. Place the proper signatures in the PacifiCorp title block.

NOTE: These signers will be responsible only for the PacifiCorp title block, not for the content of the drawing.

Printed versions of this standard may be out of date. Please consult the online standards for the most recent version.
©2016 by PacifiCorp Engineering Publications.

Upon successful completion of these steps, the drawing shall have an image of the signed original survey shown within a PacifiCorp title block (the image being in modelspace and the title block being in paperspace) along with the actual survey entities in modelspace (not shown through the paperspace viewport).

7. Grading Plan Drawings

The primary software for developing grading drawings is Civil 3D. The provided template, in tabbed format, shall be used. The file name shall end with ".000" (i.e., 123456.000). No XT XREF shall be used on new projects and all sheets shall be cut from the tabbed file. An XT XREF may be used when revising an old grading plan that has an XT XREF, when a new survey is not available, and when creating a new surface containing the XT topography is impractical relative to the scope of work

The template—which includes a workflow used as an aid to develop of the grading plan—includes pre-developed "styles" with the required layers, line types, dimensions, profiles, notes, and details. Internal roads and yard surfacing shall be detailed and dimensioned using these styles and layers.

8. Company AutoCAD CORP-C3D Template

The company has created an AutoCAD CORP-C3D template to assist in the creation of proper grading plans. The template is intended to have all of the tools necessary to develop a set of grading plans.

Though all users have preferred methods of working in AutoCAD, the final grading plans that are delivered to the company must comply with company standards. Notes in the template file outline the company's preferred procedures, conventions and requirements, and help to explain what the company expects from the user.

The CORP-C3D template was created to:

- Establish grading CAD standards
- Enforce the grading CAD standards
- Produce quality and consistent grading plans
- Establish efficient procedures for creating grading plans
- Easily exchange grading plans between the company and consultants
- Simplify the management of electronic files
- Effectively convert survey CAD files to grading plans

The company's goal is to make the template as user-friendly as possible. The company's civil design group welcomes comments and suggestions that may improve the efficiency and quality of the template.

8.1. CORP-C3D Template Instructions

Users of the template are expected to be familiar with company standards. They are also expected to be proficient with AutoCAD, and to know how to use layers, annotative objects, MLEADERs, viewports, Toolspace Prospector, and Toolspace settings and styles. Though the

Printed versions of this standard may be out of date. Please consult the online standards for the most recent version.
©2016 by PacifiCorp Engineering Publications.

company has issued formal standards and criteria, consultants are expected to resolve general AutoCAD questions and issues on their own.

While developing the grading plan the CAD operator / template user shall follow this procedure:

1. Use “Match Properties” to update entities to the company standards.
2. When viewports are assigned a certain scale, annotative texts, hatches, blocks and dimensions from modelspace won’t appear through the viewport unless they have been enabled to appear. To enable them, right-click on the annotative objects within modelspace and enable them to appear at the desired scales within “Properties.”
3. Place viewports on the DEFPOINTS layer.
4. The PSLTSCALE = 1.
5. The LTSCALE = 0.25.
6. Text height = 0.09375″ (all text shall appear to be the same height, with title scales being 0.125″).
7. Layer assignments:

All paperspace text shall be on the “TEXT” layer

   a. All modelspace text should be on the “C-ANNO-TXT” layer (or “C-ANNO-TXT1,” “C-ANNO-TXT2,” or “C-ANNO-TXT-BOLD.”)
   b. Blocks shall be on their respective layers.
   c. Tables shall be on the ”C-ANNO-TABL” layer.
   d. Keynotes shall be on the “C-ANNO-KEYN” layer.
   e. Survey points shall be on the “C-TINN-PTS-V” layer.
   f. FG points shall be on the “C-TINN-PTS” or the “C-ANNO-IDEN” layer.
   g. Symbols shall be annotative, and on their respective annotative layer, or the “C-ANNO-SYMB” layer.

8. All dimensions shall be annotative and placed on the “C-ANNO-DIM” layer. They may also be placed on an alternate DIM layer (i.e., “C-ANNO-DIM1”) if necessary. A DIM style named ‘annotative’ was created in the CORP-C3D template and shall be used by the user. If adding an annotative dimension in modelspace the paperspace scale needs to be the current scale in the lower right corner, or an annotative scale can be added in properties. Another approach is to add a dimension through the viewport where it needs to be seen because the dimension will automatically be drawn to the annotative scale of the viewport.
9. All leaders with text shall be created with MLEADER (annotate/leaders/multileader) and shall not be exploded. An MLEADER style named ‘annotative’ was created in the CORP-C3D template and shall be used by the user. If adding an MLEADER in

Printed versions of this standard may be out of date. Please consult the online standards for the most recent version.
©2016 by PacifiCorp Engineering Publications.

modelspace the paperspace scale needs to be the current scale in the lower right corner, or an annotative scale needs to be added in properties. Another approach is to add an MLEADER through the viewport where it needs to be seen because the MEADER will automatically be drawn to the annotative scale of the viewport.

10. All hatches shall be on their respective layers, and shall appear at the same scale in all views, including the profiles, sections and details. Since they are annotative, they shall appear at the same scale in all views. The paperspace scale is noted beside each hatch in the legend. The hatch shall be annotative when created, and the various scales can be assigned to the hatch. While creating a hatch in modelspace set the drawing scale (in the lower right corner) to the scale that the viewport will be in paperspace, and within 'Hatch Creation' set the paperspace hatch scale in 'Properties' and select Annotative' in 'Options'. For example, the yard finish rock hatch pattern scale will be 0.50 in 'Properties'. If the hatch pattern needs to be seen in a viewport with a different scale than the hatch was created with simply add that annotative scale within properties. If a hatch is created in paperspace the scale will be 1″=1′.
11. Delete all items from the grading plan that are not applicable (such as line types in the legend, notes, etc.).
12. The PacifiCorp blocks can be taken from the civil palette or from the template file and placed on their respective layers. Since they are annotative, confirm they are assigned the appropriate scales to appear in the desired viewports.
13. Before drawing any objects, ensure that the appropriate layer is current.
14. To avoid importing erroneous layers, ensure that all objects are on an appropriate layer before copying/pasting them into the grading plan.
15. Profiles are to be created using the “PacifiCorp PV-5 VERT” or “PacifiCorp PV-10 VERT” profile view styles. Profiles shall follow the same conventions used in the profile examples located in modelspace.

8.2. Existing Grade (EG) Creation

If the EG surface needs to be created because it has not been provided by the surveyor, the designer shall create the EG surface in the grading plan with the data provided by the surveyor. A designer building the EG surface shall take the following steps:

1. Save the CORP-C3D Template as the project grading plan by naming it the assigned sheet number.
2. Communicate with the surveyor to assure that the grading plan is using the same coordinate system as the survey, and then set the coordinate system within the cad file to the appropriate coordinate system. This can be done as follows: *Toolspace*, *Settings*, right click on the drawing title, *Edit Drawing Settings*… .Then set the appropriate coordinate system in the Units and Zone tab. The surveyor should also provide information about the scale factor needed to obtain the ground coordinates and the point that was used as the

Printed versions of this standard may be out of date. Please consult the online standards for the most recent version.
©2016 by PacifiCorp Engineering Publications.

base point. See the Survey Scope of Work to verify the specific requirements for the project.

3. Import the XML file provided by the surveyor, or if an XML file is not provided import the points from the surveyor's point file into modelspace. Make sure that the current layer is set to 'C-TINN-PTS-EG or V'. The points can be made into a "Point Group," excluding any points that are above or below the existing grade. The survey points can be renumbered if necessary to avoid conflicts with the finished grade (FG) point numbers. Make sure that the appropriate coordinate system is set within the before importing an XML file (see 8.3.3.2).
4. Copy/paste the objects from the surveyor's CAD file if the template was not used by the surveyor, making sure that the objects are on the PacifiCorp layers prior to copying them. The objects used for creating the EG surface are 3D polylines, boundaries, and drawing objects. Since contour lines do not show what is happening between the contours, 3D contour lines may only be used in conjunction with points and breakline. Contours may only be used if no points are available.
5. All objects and points shall be on the coordinate system required by the Survey Scope of Work.
6. If an XML file is not provided by the surveyor, build the EG surface from the data and objects provided by the surveyor.
7. Compare the EG contours with the surveyor's contours. If they don't match, troubleshoot until they do.
8. Convert the PDF file that was provided by the surveyor to a .tif.
9. Assign the .tif the same drawing number as the new topographic survey drawing (e.g. 123456.000.tif).
10. Insert the .tif into modelspace.
11. Create a viewport in paperspace inside of the company border and assign it the correct scale.
12. The survey, including the surveyor's border and title block, shall fit to scale inside the viewport.

8.3. Grading Plan Creation

Once the EG surface is built from the survey data, the paperspace tabs in the template shall be used to create the necessary sheets within the grading plan. Delete any unused tabs. After the grading plan is created, objects from the CORP-C3D template can be copied into the grading plan. Viewports can be copied from the template, as long as the objects in modelspace are in their appropriate locations.

Read the procedure notes to become familiar with the intended use of the template. After becoming familiar with the procedure notes, the notes may be erased, and all items from the template that are not applicable to the project may be deleted. The user shall use all company

Printed versions of this standard may be out of date. Please consult the online standards for the most recent version.
©2016 by PacifiCorp Engineering Publications.

styles, layers, blocks, hatches, linetypes, dimension styles, text style, tables, borders, specifications, contractor notes, and construction notes. If the user needs something that is not provided in the template (such as a style or a hatch or a block), something else may be used, if approved by the company. Items created or supplied by the user must reside on a PacifiCorp layer.

The user shall purge the drawing when the grading plan is completed. The final CAD file must be audited against the company standard template and returned to the company when it is complete. The company will not accept any CAD files that do not pass the audit.

8.3.1. Grading Plan Revisions

If a grading plan is created for an existing substation, and the substation has a previously-developed grading plan, consider how to work with the coexisting grading plans. The existing grading plan can by kept by revising it and adding the new information as a revision, or the existing grading plan can be voided and superseded with the new grading plan. Confirm that no other sheets are left behind when voiding a grading plan. Only an entire series can be voided.

Any revisions, voiding, or superseding must be properly processed, documented and checked back in. Alternately, use notes to cross reference two or more coexisting grading plans when voiding or superseding an existing plan is not preferred or practical. If a new plan is created, the old plan shall be checked out and a reference note added. It shall be upgraded to the next revision number and checked back in.

Drawings under review shall be revision “0A” with a “Preliminary” stamp. After the drawing is complete, checked, and ready to be checked in, it shall become revision “0.” If the drawing is created for bidding purposes, it shall have a “For bid purposes” stamp.

If any revisions are made to the drawing after it has been issued for bid, it shall be upgraded to the next revision number and reissued to retain a record of any changes and subsequent change orders issued by the contractor during the construction phase.

8.3.2. Grading Plan Vicinity Maps

The vicinity map should be at a large scale (such as 1″ = 1000′) that will represent a bird’s eye view of the area. An example of the vicinity map is shown on the template. The finished map shall then be made into a block to skirt past the audit routine. See company Engineering Handbook 9A, Section 16, *Vicinity Maps*.

8.3.3. Recommended Workflow for Grading Plans

1. **Setting layer and scale:** Make sure that the current layer is set to the right layer before drawing objects, importing points, and X-referencing drawings or images. The “Annotation Scale” in the lower tray must also be set to the appropriate scale when creating profiles, dimensions, MLEADERS, hatches, tables, points, etc. If objects are copied/pasted from other CAD files, the objects being copied shall be on a PacifiCorp layer before pasting them into the grading plan (unwanted layers may come with pas-

Printed versions of this standard may be out of date. Please consult the online standards for the most recent version.
©2016 by PacifiCorp Engineering Publications.

ted objects). Imported blocks from the palette should automatically be placed on the right layer.

2. **Importing survey data:** Before importing survey data assure that the grading plan is using the same coordinate system as the survey, and then set the coordinate system within the cad file to the appropriate coordinate system. This can be done as follows: *Toolspace*, *Settings*, right click on the drawing title, *Edit Drawing Settings*…. Then set the appropriate coordinate system in the "Units and Zone" tab. The surveyor should also provide information about the scale factor needed to obtain the ground coordinates and the point that was used as the base point. See the Survey Scope of Work to verify the specific requirements for the project.

Import the XML file provided by the surveyor, or if an XML file is not provided import the points from the surveyor's point file into modelspace. Make sure that the current layer is set to 'C-TINN-PTS-EG or V'. If data is not imported using Civil 3D (points from a file), the survey data file can be XREF'd after converting the AECC points to blocks (home: points: convert land desktop or AutoCAD points to blocks, then explode to blocks) then bound and exploded. This procedure will create XREF layers that will need to be changed. Units in both files shall be set to feet; coordinates and elevations shall correspond to the survey. Data may also be copied/pasted from the survey CAD file, provided that the objects are on the proper layers before copying and the coordinates, and that elevations correspond to the survey. If survey data is placed on the PacifiCorp template, it can be used as the grading plan, but it must first be verified that objects are correct and on the right layers.

3. **Viewports:** After the survey data is imported, stretch the viewport in paperspace as needed to fit the sheet. Allow enough room around the viewport for the notes, the legend, and other necessary information in paperspace. Locate the survey through the viewport by using zoom-extents, and zoom to the survey. Pick an appropriate scale for the viewport to fit the project area by picking the viewport border and by using the scale menu in the lower tray. Once the appropriate scale is selected, lock the viewport.

4. **XB file:** Visit the XB to verify that the baselines and fence lines have been drawn correctly and placed on the right layers. Make sure that the design is current. The baselines should terminate 3′ inside the fence lines. The intersection of the baselines shall be at 0,0.

5. **XREF the XB:** While in the grading plan modelspace, XREF the XB file (make the XREF layer current), place it in the proper location, and rotate as needed. While XREFing the XB, make sure that the "Path Type" is set to "No Path." The XB shall be kept in the grading plan, and the objects in the XB shall be used to represent those objects in the grading plan. Keep the XB attached as an XREF. Foundations and cable trenches drawn in the XB shall be frozen inside the grading plans. Be aware that changes made in the XB will impact the grading plan.

6. **Existing grade (EG) surface:** Before the proposed surface can be created, an existing grade (EG) surface must be created (see #2). Use the information from the

Printed versions of this standard may be out of date. Please consult the online standards for the most recent version.
©2016 by PacifiCorp Engineering Publications.

survey to create the EG surface, and compare the resulting contours with the survey contours to ensure that it is correct.

7. **Finished grade (FG) surface:** Design the proposed substation based on the XB. The fence line can be offset 5′ out; the offset lines may be used as the edge of the yard rock. These lines are also used as the edge of the substation and the top of the slope to the surrounding area. If the slope rises beyond the edges of the substation, a ditch is needed to manage the stormwater runoff. This means that the outer edge of the substation (5′ minimum outside of the fence line) will always slope down, either to the existing grade or to the bottom of a new ditch. If a new ditch is added, it will always slope up from the bottom of the ditch to the existing grade. The slopes outside of the substation edge shall have a 2:1 maximum slope. The ditch should be deep enough to adequately manage the stormwater runoff. Slopes that are steeper than 2:1 shall be pre-approved by a company representative. Raising or lowering the substation finish grade elevation may be necessary in order to balance the cut and fill volumes.

8. **Substation slopes:** The finished grades inside the substation shall slope about 1% to drain the surface runoff. They shall slope in the direction that the native grade slopes when possible. All sheet-flows should be a maximum of 300′ long, after which the runoff should be intercepted by a stormwater collection system such as an underdrain, catch basin, trench drain or ditch, and diverted to a strategic discharge location.

In an expansion project, matching the proposed grades with the existing substation grades shall be considered. Also consider the grades in the area of foundations and new substation equipment. The proposed grades will slope for drainage. Since the tops of foundations remain constant, some foundations may reveal more than others. For example, some footings may reveal 6″, while others may reveal more or less. It may be more practical to slope the surface in a different direction.

9. **Stormwater runoff:** All runoff should simulate historic runoff patterns and should discharge to locations that will compensate for the impact of the development. Since the construction will disrupt the natural flow of the runoff, it is necessary to release the storm water in a way that models pre-developed conditions. Also consider treatment, detention/retention, how to deal with concentrated flows where there used to be sheet flows, how to release the runoff at historic rates, and how to prevent post-construction erosion. All storm water runoff shall be managed according to local governing requirements.

10. **Excavation:** While designing the grades for the substation, it is important to minimize the amount of excavation. Review the geotechnical report for the depth of top soil removal and to see if the native soils can be used as backfill. The cut and fill volumes shall be balanced if possible, but this will depend on the existing terrain. If the native soils cannot be used as fill, minimize the amount of imported fill. It is more economical to export excavated native soil then to import structural fill.

11. **Building an FG surface:** 3D polylines may be used to define the outer edges and grade changes of the substation, ditches, ponds and access roads. Draw the 3D

Printed versions of this standard may be out of date. Please consult the online standards for the most recent version.
©2016 by PacifiCorp Engineering Publications.

polylines wherever grade breaks are needed, and then stretch the 3D polylines in the Z direction to establish the desired elevations. The 3D polylines (and breaklines) should go on the “C−TINN−BKLN” layer. Alternately, feature lines may be used instead of 3D polylines. This method of creating an FG surface is a suggestion and alternate methods may be used.

After the 3D polylines are drawn, the proposed FG surface can be created. The 3D polylines are converted to Feature Lines and an FG site can be created with the Grading Creation Tools. The outer 3D polylines that represent the edges of the substation (sloping down to the existing grade) and the new ditch bottom (sloping up to the existing grade) are the outer limits of the FG surface. It is often easier to draw a continuous 3D polyline along the outer limits of the FG surface to minimize the number of Feature Lines used to ‘daylight” to the existing surface. After creating an FG Site and Grading Group the outer Feature Lines are used to ‘daylight’ to the existing surface and the inner Feature Lines are used to create ‘infills’

If a 2D polyline boundary is drawn around the outer limits of the surface to control the contour lines, it should go on the “C-TINN-BNDY” layer.

As stated earlier, raising or lowering the substation finish grade elevation may be necessary in order to balance the cut and fill volumes. There is a way to do this in AutoCAD Civil 3D, and the CORP-C3D template has some notes in modelspace to explain how it is done.

After the FG surface is created add enough contour labels to the 5′ contours to adequately show the elevations in the area. If the contours are far apart, or if clarity is needed, add contour labels at 1′ intervals.

12. **EG mask:** After creating the FG surface, the new contours will be shown and the quantities can be determined. The EG contours that are behind the FG surface can be masked by creating a polyline around the edge of the FG surface and using it for the mask. The Limits of Construction closed polyline (on the C-CTRL-LOCN layer) that was created by the user when building the FG surface (by using the ‘daylight’ polyline found on the C-TOPO-FEAT and C-TOPO-GRADE layers) can be used to create the mask polyline. The mask polyline should be on the “C-TOPO-MASK” layer, and it can be turned off.

13. **Profiles:** Profiles and sections shall be provided to help illustrate the grading and material sections. A sample of the profiles can be found in the CORP-C3D template. The new substation shall have a minimum of two profiles that are perpendicular to each other, showing the full extent of the yard. Alignment polylines are drawn where the profiles or sections are intended to be, and the alignments are created from the polylines. All access roads should have a profile along the centerline alignment that shows the grades and vertical curves that can be tied to the horizontal alignment of the road. All ditches, trenches, utility structures and ponds shall have a section or detail to clarify the intent of the design.

Printed versions of this standard may be out of date. Please consult the online standards for the most recent version.
©2016 by PacifiCorp Engineering Publications.

14. **FG points:** When creating surface points on the grading plan to define the coordinates and elevations of each controlling feature, put them on the "C-ANNO-IDEN" layer, and in a strategic pattern that is easy to follow. The points shall also have a description that is easy to understand. See sample grading plans to see how points are positioned, defined and described. A point table shall be generated in modelspace from the inserted FG points and put on the "C-ANNO-TABL" layer. A viewport in paperspace shall appear on the grading plan to show the point table. The profile sheet is provided on the CORP-C3D template, and the viewport will show the profile if placed in the proper place in modelspace.

15. **Quantity tables:** The active quantity table is located in modelspace where it can be populated. An explanation of table use and quantity entry is provided with the table. The table is viewed through a viewport on sheet 2 of the CORP-C3D template and is locked.

16. **Blocks and symbols:** All symbols, such as scale bars, north arrows, section arrows, subtitles, and breaklines, should be taken from the palette whenever possible. A block (also on the palette) with all the layers can be brought onto the drawing to reinstall the Civil 3D layers.

17. **Hatches, texts, blocks and dimensions:** Hatches, texts, blocks and dimensions in modelspace should be annotative, so that they will be the proper size in the desired paperspace viewports. The objects must be set in modelspace to appear in those paperspace viewports. The "Annotation Scale" in the lower tray must be set to the appropriate scale when creating these objects, or they can be set in the 'Properties' tab, and they shall be on the appropriate PacifiCorp layer as defined in the CORP-C3D template.

8.4. Civil3D Data-Shortcuts

Civil3D data-shortcuts are very small XML files which provide complete reference copies of objects that can be inserted into one or more drawings. Data shortcuts are not used in the company; all data references shall be promoted in Civil 3D cad files prior to delivering to PacifiCorp.

9. Pre-Construction CAD QAQC Submittals

Pre-construction CAD QAQC submittals are used for quality checks only, and none of these documents are input into the company's DM. Make a copy of the working project, promote all data-shortcuts, and send the company complete stand-alone files for these submittals. Please note that pre-construction CAD QAQC submittals will not be archived or stored on company servers, nor will they be returned to the originating consultant.

Printed versions of this standard may be out of date. Please consult the online standards for the most recent version.
©2016 by PacifiCorp Engineering Publications.

10. Initial Issued-for-Construction Submittals and Subsequent Submittals

To submit initial issued-for-construction packages, and subsequent submittals, please include the following:

- One or more DVDs with a .zip file containing the complete directory structure of the working Civil 3D project. Include all production and reference drawings and the working directory. Also include any additional files and materials required for the complete archival of the project at the time of its submittal to the company. The .zip file will be entered into the company's electronic document management system (DM), and referenced in each individual project drawing's metadata.
- A spreadsheet clearly listing all submitted company project drawings (also to be included in the project ZIP file).
- A complete set of production drawings in PDF format suitable for input into the company's DM.
- A complete set of production AutoCAD drawings with all data shortcuts promoted. These promoted drawing files will be entered into the company DM. A notation will be placed in each records comment (version) field indicating that it was created with Civil 3D. Reference the name of the archived Civil 3D project .zip file.

11. SPCC Drawings

Spill Prevention Control & Countermeasure (SPCC) drawings shall be created using the same method as foundation drawings, using a Corp-D title block and with the following criteria:

1. Notes and legends shall follow the standard format using horizontal and vertical lines with the text string above the horizontal line. Text height shall be 1/8″ and the body of the notes shall be 3/32″.
2. North arrows shall be placed in the upper right-hand corner of the drawing.
3. The scale bar shall be placed in the lower right-hand corner.
4. The drawing units shall be set to "architectural."

12. Structural Drawings

Structural drawings are tabbed files created from the standard file in DM, or from a previous project. When blocks are modified, all sheets will be updated. Structural drawings follow the standard sheet layout where sheet one shows the front elevation, side elevation and plan. Subsequent sheets include the mark numbers and their details.

Design shall be done in modelspace, drawn 1:1 and shown through viewports in paperspace with a valid scale. Text justification for DTEXT shall be middle left and middle right. Text justification for MTEXT and MLEADERS shall be top left and top right. When lining up the multiple details in paperspace, the details are to be lined up horizontally and vertically.

13. Sheet Contents

Sheet one shall include the bill of material, material and fabrication notes, general design notes, legend and reference blocks. These are all taken from the civil palette.

Printed versions of this standard may be out of date. Please consult the online standards for the most recent version.
©2016 by PacifiCorp Engineering Publications.

Subsequent sheets shall include the mark numbers, which reflect the last three digits of the drawing number (as shown in Figure 5).

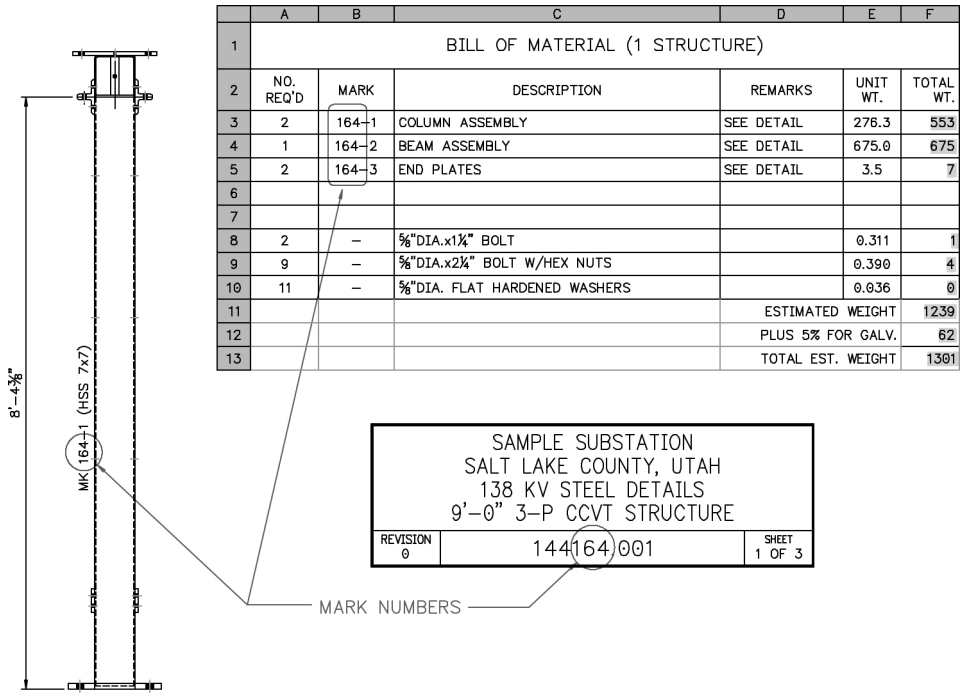

	A	B	C	D	E	F
1	BILL OF MATERIAL (1 STRUCTURE)					
2	NO. REQ'D	MARK	DESCRIPTION	REMARKS	UNIT WT.	TOTAL WT.
3	2	164-1	COLUMN ASSEMBLY	SEE DETAIL	276.3	553
4	1	164-2	BEAM ASSEMBLY	SEE DETAIL	675.0	675
5	2	164-3	END PLATES	SEE DETAIL	3.5	7
6						
7						
8	2	–	⅝"DIA.x1¼" BOLT		0.311	1
9	9	–	⅝"DIA.x2¼" BOLT W/HEX NUTS		0.390	4
10	11	–	⅝"DIA. FLAT HARDENED WASHERS		0.036	0
11				ESTIMATED WEIGHT		1239
12				PLUS 5% FOR GALV.		62
13				TOTAL EST. WEIGHT		1301

Figure 5—Sheet Numbering and Mark Numbers

13.1. Layering

Steel blocks in these drawings shall reside on the steel layer (with the exception of center, hidden and dashed lines, which shall be on their respective layers). Line work inside the block shall be on layer zero.

13.2. Blocks

When using the WELD-SYM block from the palette: set the appropriate DIM style current, pull the block in from the palette, then update the leaders with the “DIM update” command. This will give the leaders the proper arrow size.

XCLIP’ing is used with blocks. It is permissible in structural drawings only. When a column or beam is stretched, ensure the details that use the column or beam as a block are not adversely affected.

EXAMPLE: If the item is stretched out of the limits of the XCLIP frame, detail will be lost. Some steel entities may be dynamic and can be stretched by highlighting the object and using the arrow to stretch.

Printed versions of this standard may be out of date. Please consult the online standards for the most recent version.
©2016 by PacifiCorp Engineering Publications.

13.3. Base Plate Holes

Base plate holes shall match the anchor bolt size. For example, if the bolt diameter is less than 1″ then the base plate hole shall be “bolt dia. + 1/8″,” however, if the bolt diameter is greater than, or equal to 1″, then it shall be “bolt dia. + 1/4″.”

13.4. Dimensioning

Below is the typical style of dimensioning where an overall dimension, a center dimension, and dimensions from the center, are used for dimensioning details. Dimensions shall be shown at the top and left side of the details. Text shall be shown on the right and on the bottom. Use single line text on the TEXT layer using “%%U” for the line placement as shown for the section.

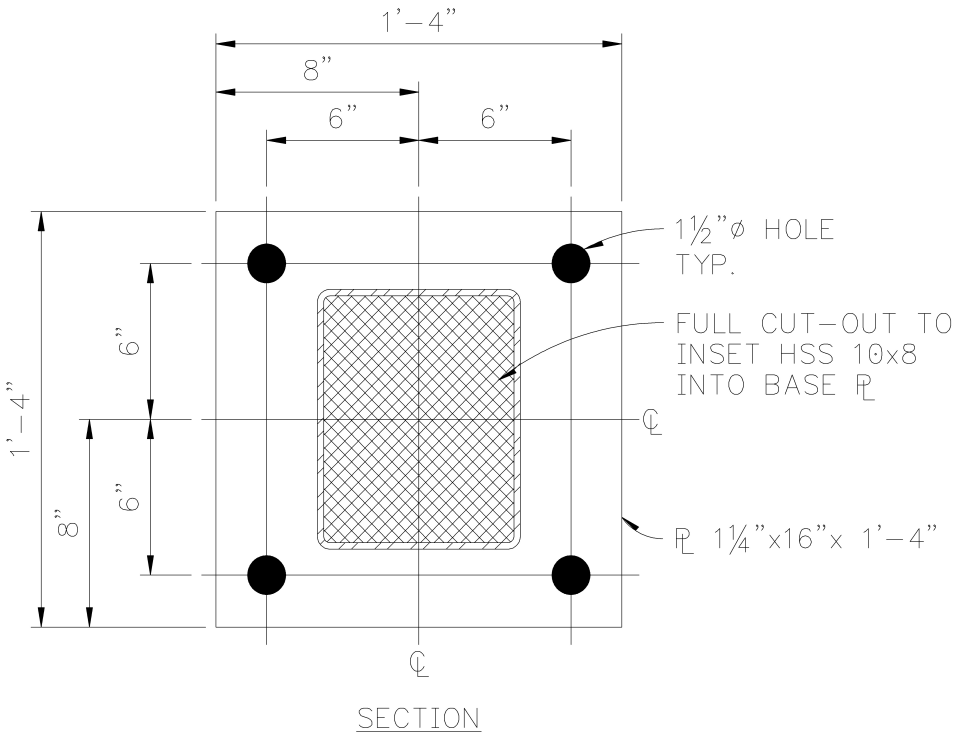

Figure 6—Typical Dimensioning (Example)

14. Handbook Document Issuing Department

The engineering standards and technical services department of the company published this document. Questions regarding editing, revision history and document output may be directed to the lead editor at eampub@pacificorp.com. Technical questions and comments may be directed to civil engineering. This document shall be used and duplicated only in support of company projects.

Printed versions of this standard may be out of date. Please consult the online standards for the most recent version.
©2016 by PacifiCorp Engineering Publications.

9B.4—Communications Drafting Standards

1 Scope

This section of PacifiCorp's Engineering Handbook provides communications discipline-specific drafting and design standards. For an overview of general PacifiCorp drafting standards, see Engineering Handbook volume 9A, *AutoCAD—General Standards*

Communications drawings vary from the standards discussed in volume 9A. *Block Usage and Development* drawings have their own standard format (discussed in section 3). Drafters without access to PacifiCorp servers should contact their EPC contact or the communications drafting department admin at commdraft@pacificorp.com to request access.

2 General Document Standards

The following are general drafting practices standard to communications drawings. Following these practices when creating documents ensures conformity to standards set forth by communications engineering.

1. If more than half of a raster image requires revision, the entire file shall be redrawn in AutoCAD.
2. Drawings scaled at 1:1 shall have no viewport. All entities shall be placed in paper space. Each drawing shall have only one layout tab named "Layout1." If more layout tabs are included in an existing drawing, they shall be deleted.
3. With drawings found to be out-of-scale, it is not reasonable to re-draw the drawing. Putting NONE in the scale area of the title block is acceptable.
4. When needed, the communications department does allow the overwriting of dimension text.
5. Drawings with a CII–CRITICAL INFRASTRUCTURE INFORMATION stamp shall be on the 0 layer. There should be no new rev 0 drawings with the CII–CRITIICAL INFRASTRUCTURE INFORMATION stamp unless specifically approved by PacifiCorp's transport and SCADA engineering departments.
6. Revision clouds, text, leaders, and dimensions shall be placed in the same space as the rest of the drawing (paper space or model space).
7. SNAP shall be turned off, except in block & level drawings.

2.1 Layer Control

1. Use only the standard layers that come in the CorpD–Comm.dwt template file.
2. All colors, line types, and line weights shall be set to BY LAYER for all lines, objects, blocks, and text.

3. All all non-standard blocks, text styles, dimension styles, layers, and line types shall be purged.

2.2 Text and Dimensioning

Text and dimensions that are incorrect shall be corrected and formatted as follows:

1. Text shall be set to the Simplex1 font type "standard." Use only the text style that comes in the CorpD−Comm.dwt template file.
2. Use the S1, S2, S3, S4 thru S8 styles to narrow text.
3. The width factor shall always be set to 1.00.
4. Lowercase text shall not be used. (Exceptions: industry standard units and names, i.e., dBm, MHz, kHz, DMXplore.)
5. Use only the dimension styles in the CoprD−Comm.dwt template file.

NOTE: Manufacturers' logos on equipment elevations are allowed exceptions.

2.2.1 Text Height

1. Text height shall be properly justified and 1/8" (.125) in height.
2. Headings shall be 3/16" (.1875) in height.
3. Headings that are free-floating shall be underlined and placed on the TEXT HVY layer. If the heading is part of a table, place headings on the text layer and do not underline them.

The following entities have varying text size and exceptions are allowed. These are:

1. equipment elevation views
2. 66 block diagrams
3. tables in drawings (where the size of the table takes up nearly the whole drawing, and the text size is smaller than 1/8")
4. DS1 diagrams
5. existing attributed blocks with established text heights

Additionally,

6. Manufacturer's logos and card elevation views: text inside these should be left as-is, however, any text and leaders describing the equipment or card should be standardized.
7. If the drafter encounters any other drawing in which the information and/or the integrity of drawing would be compromised by changing the text size, it should be left as found.

2.3 Drawing Size

Print size for communications drawings shall be set to 11 × 17 inches for all drawings except for block & level. Block & level drawings shall be set to 8.5 × 11 inches. The following settings shall also be set:

1. LTscale = 0.25
2. PSLTscale = 1
3. Plinegen = 1

Drawings shall be saved set to paper space, zoomed to border extents, with the 0 layer active.

2.4 Communications Title Block

Communications title blocks are different from any other discipline. Attributes in this block that are missing or incorrect shall be corrected as follows:

Tag 1 **Discipline:** If COMMUNICATIONS is not in this tag, and if the red lines do not direct changing this to COMMUNICATIONS, then do not work on this drawing; contact communications document control.

Tag 1A **Facility Name & Type:** If the site is a COMM SITE, this field shall be spelled out with two words.

Tag 2 **Document Type:** Proper document type naming shall be taken verbatim (without exception) from the list found in Pacificorp Engineering Policy *104 – Indexing of Discipline and Document Type*. (http://idoc.pacificorp.us/policies_and_procedures/eamp/dadc/fpp.html).

NOTE: Where dashes are used on the 3rd line (Document Type), a space is placed before and after the dash. For example: "EQUIPMENT ELEVATIONS - A1."

Tag 12 **PL Number (or Plant Locality Number):** Use the official PL# if available. These can be found in a pull-down menu on the border tab of the BAD CAD audit.

NOTE: Some sites do not have a PL#, or their drawings deal with an overall view of large scale, multi-state systems. PL#s are not required.

3 Block & Level Drawings

Block & level drawings have unique standards which should be followed during creation and/or modification.

1. All block & level drawings shall have no viewports with all entities set in paper space.
2. Each drawing shall have only one layout tab which shall be named Layout1. If there are more layout tabs, they shall be deleted.
3. The rev numbers in the title block and the revision block shall match. There shall be only one revision block per drawing. Revision blocks shall not be stacked.
4. Text shall be set to the Simplex1 font type "standard."

5. Use S1, S2, S3, S4 thru S8 styles to narrow text. An exception used in microwave blocks is: VERT.
6. Text height shall be properly justified and 1/16" (.0625) in height. Allowable exceptions to this include existing attributed blocks with established text heights (text inside these should be left as-is). If the drafter encounters a drawing in which the information and/or the integrity may be compromised by changing the text size, it shall be left as found. Contact communications engineering at commdraft@pacificorp.com with questions.
7. To identify text for the location of equipment and /or antennas, use the "B&L–FAC–BRKT" block.
8. Lowercase text shall not be used. (Exceptions: industry standard units and names, i.e., dBm, MHz, kHz, DMXplore.)
9. SNAP shall be set to 1/32" and shall be used for all items.

The following attribute tags 1–17 and 24, if missing or incorrect, shall be filled out as follows:

Tag 1 **Discipline:** (Typical: COMMUNICATIONS)

Tag 2 **Circuit Number:** (Typical: two numbers, three letters, and four numbers)

Tag 3 **Facility Type:** (Typical: CIRCUIT DIAGRAM).

Tag 5 **Document Type:** (Typical: BLOCK & LEVEL)

Tag 6 **Drawing Title:** (All CAPS)

Tag 7 **Drawing Number:** In filenames of older drawings, "C" designates an East-side location while an "E" designates a West-side location (for example, 99999C01 = East-side).

Tag 8 **Sheet Number:** Sheet 1 shall read "1 OF (total sheets)." Following sheets shall read numerically i.e., "2".

Note: When adding sheets, "1 OF (total sheets)" shall be clouded and the sheet shall be "revved" up.

Tag 9 **Revision Number**

Tag 10 **Drawing Scale:** (Typical: NONE)

Tag 11 **Project/ER Number**

Tag 12 **Drawing Date:** (i.e. 01/01/01, not 1/1/2001, or 1/1/01)

Tag 13 **Engineer's Initials**

Tag 14 **Designer's Initials**

Tag 15 **Drafter's Initials**

Tag 16 **Checker's Initials**

Tag 17 **Approver's First Initial and Full Last Name**

Tag 24 **CAD File Number**

4 Handbook Issuing Department

The Engineering and Asset Management Documentation department of PacifiCorp published this document. Questions regarding editing, revision history and document output may be directed to the lead editor at (503) 813–5293. Technical questions and comments regarding the content of this document may be directed to Drazen Galic, Transport & SCADA Engineering, (503) 813–6910.

This material specification shall be used and duplicated only in support of PacifiCorp projects. This document is considered a valid publication when the signature blocks below have been signed by the current revision's author and manager.

Approved: _____
Drazen Galic, Lead Design Specialist
Transport & SCADA Engineering

Approved: _____
Ray Ramirez
Engineering Documentation

9B.10—Thermal Generation Drafting Standards

1. Scope

This section of the company's Engineering Handbook provides thermal generation discipline-specific drafting and design standards. The requirements elaborated in this document apply to the thermal generation group only and should not be considered applicable to other company groups. This handbook document must be used in conjunction with Engineering Handbook Volume 9A, *AutoCAD—General Standards*. These two documents together form the computer-aided drafting standards for thermal generation. This document applies to all work, whether it is prepared internally or externally.

2. General

While the AutoCAD standards are contained in this document, procedural information, and other files used for creating and managing AutoCAD drawings are available from document control personnel.

2.1. Acceptable AutoCAD Format

- All AutoCAD files must be provided in the current, company-accepted format.
- Final AutoCAD hybrid or XREF'd drawings must be compatible with the current Electronic Document Management System (EDMS).
- Final documents must not be provided in a newer version of AutoCAD than the edition being used by the company.

3. Borders

All borders will have a border revision date near the lower left corner just inside the border line. Each AutoCAD drafter/designer, whether internal or contracted, is responsible for ensuring that the most current version of the company border or template is used.

3.1. Border Insertion Point

All border insertion points are located at coordinates 0,0 in the paper space environment. This places the lower left corner of each border at coordinates 0.5,0.5.

3.2. Border and Paper Size

The borders shown in 9A, Table 1 have been developed for use on all company drawings. All borders approved for thermal generation are named as described below:

1. The CORP-D-GEN border is the preferred border, but the CORP B-GEN, CORP-E-GEN, and CORP-A-GEN may be used to meet specific plant needs.
2. *The CORP-B2-GEN border must be used for Dave Johnston Plant "B" sized drawings*. **This border shall not be used for any other plants or locations.**

Printed versions of this handbook document may be out of date. Please consult the online engineering handbook for the most recent version.
This document shall be used and duplicated only in support of PacifiCorp projects. ©2017 by PacifiCorp.

3.3. Drawing Numbers

3.3.1. Assignment

Company document control shall use the following procedures when assigning new drawing numbers:

When to assign new numbers

New drawing numbers shall be assigned when the need arises for new drawings to be created at new or existing company facilities. For contract jobs, the document control and design/drafting personnel responsible for the plant site will issue a list of drawing numbers for each project.

How to use new numbers

Once the user has determined how many new numbers are needed, he or she shall contact company plant site document control personnel. The user will be given new numbers based on current plant numbering procedures for the specified location.

Legacy numbering

Legacy drawings created with numbers not associated with the plant numbering system may retain the legacy drawing number. At the discretion of facility drafting support, these numbers may be changed to meet the plant standard numbering system.

If the numbers are changed to meet the plant numbering system, the legacy numbers must be entered in the vendor assigned number fields for the drawing title block and in the EDMS. All other associated drawing numbers in this legacy series must be changed in the same way.

If necessary, new drawings may be added to an existing legacy drawing number series.

Printed versions of this document may be out of date. Please consult the online engineering handbook for the most recent version.
This document shall be used and duplicated only in support of PacifiCorp projects. ©2017 by PacifiCorp.

Generic numbering convention

When plant site numbers are not available, a generic numbering convention may be assigned by company document control personnel or plant site document control personnel. This will be structured as shown in Figure 1, and must appear in the drawing title block and the drawing file name. *The generic numbering convention will only be used when there are no plant specific numbering requirements.* See Table 1 for examples of drawing/document numbers for various types of files.

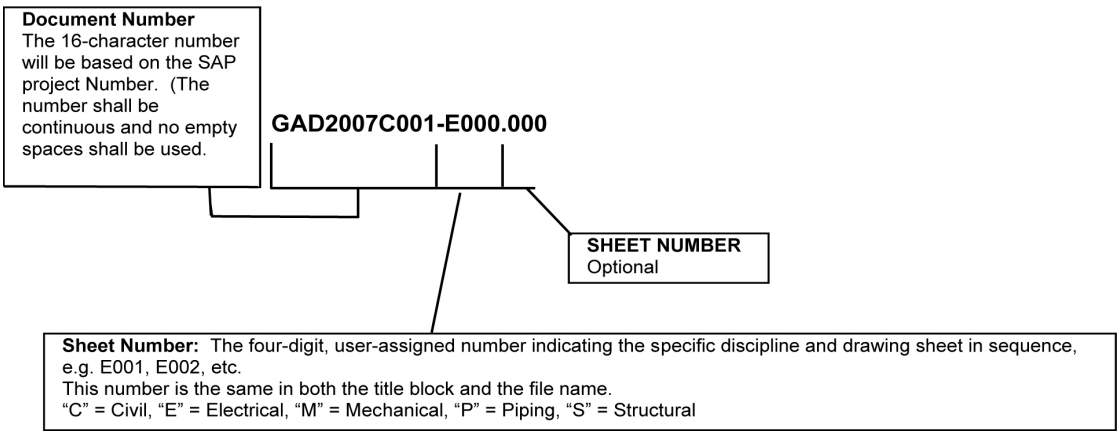

Figure 1—Drawing Number Diagram

Table 1—Drawing Number Example

Description		File Name	Title Block
Single sheet stand-alone drawing:			
		GAD2007C001-E001.dwg	GAD2007C001-E001
Drawing with multiple sheets:			
	Sheet 1	GAD2007C001-E001.dwg	GAD2007C001-E001
	Sheet 2	GAD2007C001-E002.dwg	GAD2007C001-E002
	Sheet 3	GAD2007C001-E003.dwg	GAD2007C001-E003
or			
	Sheet 1	GAD2007C001-E001_001.dwg	GAD2007C001-E001.001
Raster image file for # GAD2007C001-E001.DWG GAD2007C001-E001.tif			

Printed versions of this document may be out of date. Please consult the online engineering handbook for the most recent version.
This document shall be used and duplicated only in support of PacifiCorp projects. ©2017 by PacifiCorp.

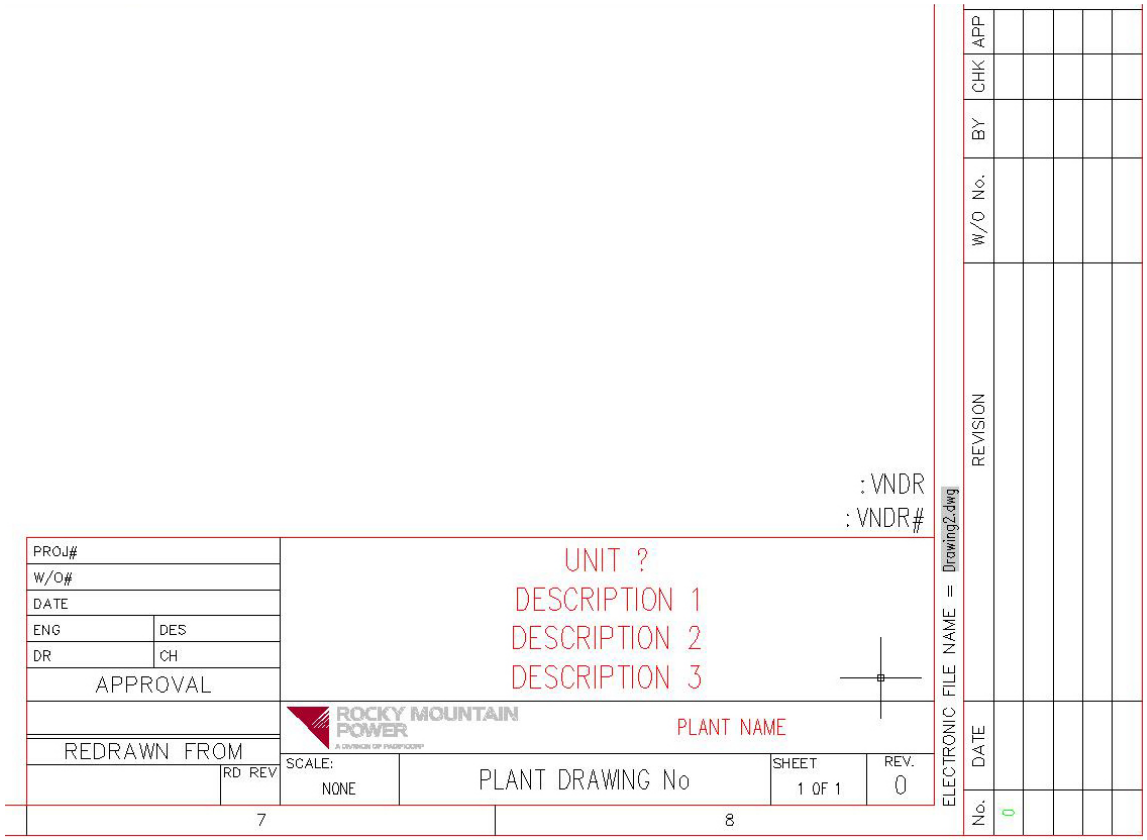

Figure 2—Title Block

3.4. Title Block

The title block is provided as part of the border, and has been assigned attributes for use with EDMS. The attributed borders have been designed to be inserted into a new or existing drawing and are required on all company AutoCAD files. They are not to be exploded or modified in any way. Modifying attribute types and styles is not acceptable. For example, modifying the drawing number attribute to a field is not acceptable. The following guidelines apply to creating content for the title blocks:

1. When entering information into the attributed fields, leading or trailing spaces are not allowed.
2. Generic, generalized title information is not acceptable. Drawing type and descriptions must be specific enough to be searched in the current EDMS.

Printed versions of this document may be out of date. Please consult the online engineering handbook for the most recent version.
This document shall be used and duplicated only in support of PacifiCorp projects. ©2017 by PacifiCorp.

3. The following are examples for the attribute tag TITLE_LINE_2 with the prompt of DRAWING TYPE:

   Example 1: Title information for a current structural steel drawing might say, "STRUCTURAL STEEL." An appropriate and acceptable description might include, "STRUCTURAL STEEL PLAN AT ELEVATION 2150', " or "STRUCTURAL STEEL DETAIL "A" AT COLUMN 3 TURBINE DECK."

   Example 2: Title information for a current instrumentation diagram might say, "INSTRUMENT DIAGRAM." An appropriate and acceptable descriptions might include, "TURBINE SUPERVISORY INSTRUMENT DIAGRAM LOOP 151 4-20mA."

4. All electrical one-line and three-line diagrams must be indicated as such in the title information.
5. All drawings used as a reference, attachment or XREF must be listed in the drawing information.

3.5. Converting Legacy Title Blocks to New Title Blocks

All legacy drawings being modified shall have the title blocks updated to the most current version. The D-style title block is preferred. Where necessary, and under the direction of the local facility drafting support personnel, alternate company standard title blocks may be acceptable. Similar nomenclature in existing title blocks is transferred to the new title block. Missing fields or incorrect nomenclature shall be corrected.

It is not necessary to transfer the legacy revision information when converting the title blocks. The drawing is rev'd up to the next number with a description of the current modifications.

4. Font and Text Style

4.1. General

Text on new company drawings shall use the *simplex.shx* font as it is supplied by Autodesk as part of the off-the-shelf AutoCAD package.

If, for any reason, the *simplex.shx* font cannot be used, the only fonts that may be substituted are the AutoCAD off-the-shelf fonts. No custom font libraries shall be used; Windows-based fonts common in other software is discouraged.

The T&D PacifiCorp owned *simplex1.shx* font mentioned in Standard 9A is not allowed.

Printed versions of this document may be out of date. Please consult the online engineering handbook for the most recent version.
This document shall be used and duplicated only in support of PacifiCorp projects. ©2017 by PacifiCorp.

4.2. Use of Text Symbols and Fraction Codes

The *simplex.shx* font contains all standard keyboard characters and many other special characters. Special characters in most cases can be created using single-line text (DTEXT). If a special character is not part of the *simplex.shx* character set, another AutoCAD packaged off the shelf font may be used. Multiline text, (MTEXT), can be used to stack numbers, fractions or other text.

4.2.1. Special Characters

Table 2, gives %% and international code (Unicode) entries for some commonly used symbols that are a part of the simplex font library. Some of these characters are not available by using "%%" but are available through Unicode. These start out as \u+ for the code value.

Table 2—Codes for Special Characters

Symbol	Code	Symbol	Code	Symbol	Code
° (deg)	%%d or \u+00b0	±	%%p or \u+00b1	⌀ (diameter)	%%c
℞ (plate or property line)	\u+214a	℄ centerline	\u+2104	Ω (omega)	\u+2126
µ (micro)	\u+00b5	underscore	%%u	∠ (angle)	\u+2220
Δ (delta)	\u+0394	(subscript 2)	\u+2082	(squared)	\u+00b2
ϕ (electrical phase)	\u+0278				

4.2.2. Fractions

Use MTEXT to create stacked fractions and text other than those created and used within the standard dimension styles.

5. Drawing Revision

5.1. Dynamic Revision Blocks and Triangles

When it is not possible to properly cloud revised imagery, the dynamic revision block should be used. Where drawing space is insufficient, a revision triangle may be placed at the revision location. Caution must be used with these triangles as they can be confused with other legitimate symbology.

Printed versions of this document may be out of date. Please consult the online engineering handbook for the most recent version.
This document shall be used and duplicated only in support of PacifiCorp projects. ©2017 by PacifiCorp.

Triangles, clouds, and dynamic revision blocks from previous revisions must be removed.

All revision clouds, dynamic revision blocks, and revision triangles must be placed on the rev layer in the appropriate space.

Revisions in model space must have clouds, dynamic blocks, or triangles in model space. Revisions in paper space must have clouds, dynamic blocks, or triangles in paper space.

6. Drawing Practices

6.1. Drawing Practices—Electricals

All new electrically-oriented company drawings must be done in a consistent manner that separates each class to its own style of drawing. (Pure single-class drawings are required.) Combination drawings are unacceptable. For example, a combination of a schematic and connection or wiring diagram in a new drawing is unacceptable.

Some practices to abide by but not limited to, include:

- Single-line diagrams shall only contain single-line imagery.
- Three-line diagrams shall only contain three-line imagery.
- Schematic diagrams shall only contain schematic imagery.
- Connection diagrams shall only contain connection imagery.
- Layout diagrams shall only contain layout imagery.

6.2. Cable and Conduit Schedules

If local plant drafting support has specific requirements, they must be followed including the use of their local template file, otherwise cable and conduit schedules must be provided in an Excel spreadsheet format.

6.3. Circuit Schedules

If local plant drafting support has specific requirements, they must be followed including the use of their local template file, otherwise circuit schedules must be provided in an Excel spreadsheet format.

6.4. Panel Schedules

If local plant drafting support has specific requirements, they must be followed including the use of their local template file, otherwise panel schedules must be provided in an Excel spreadsheet format.

6.5. Drawing Scale

All drawings should be made in real-world dimensions 1:1, (1 to 1) and shall be in the U.S. customary measurement system. For tables see Handbook 9A, Section.5, *Drawing Practices*.

Printed versions of this document may be out of date. Please consult the online engineering handbook for the most recent version.
This document shall be used and duplicated only in support of PacifiCorp projects. ©2017 by PacifiCorp.

6.6. Layers

Layer sets are provided with the standard border templates and should be used accordingly. Additional layers are available through the standards pallet or upon request. If the necessary layers are not available, others can be created based on the standard layer naming convention and with approval of the appropriate drafting support personnel.

6.7. Model Space

Model space layouts shall be used in all company drawings in the following manner:

1. All drawing geometry shall be drawn in the model space (tab) with the lower left corner at or near coordinate 0,0 unless accurate placement is requires for state plain or world coordinates systems.
2. Place the border, notes, and legends in paper space.
3. Draw all objects at 1:1 or full scale within the model space environment.
4. Set units to inches; set the types to fractional with 1/256 precision; set the angle to decimal.

6.8. Paper Space Drawings

Paper space must be used for all drawings, and must adhere to the following parameters:

1. Set units as described above in model space.
2. Insert all borders in paper space at coordinates 0,0.
3. Place general notes and legends in paper space in the available area above the drawing title block.
4. The paper space layout (tab) must be renamed from the AutoCAD default. (Example: 36x24 D) The AutoCAD default (TAB) name is not acceptable.
5. Configure the page setup at the scale of 1:1, with the plot area set to “EXTENTS” and “Center the Plot” selected.
6. Multiple paper space layout (tabs) are NOT to be used within any single drawing file.
7. Delete all paper space layout (tabs) other than the first one.

6.9. External Referencing

External referencing is encouraged throughout the design process because it reduces drafting effort in collaboration among users and across disciplines. (See the XREF documentation located in Handbook 9A, Section 5, *Drawing Practices*) The use of the XREF base drawings is not limited to the examples and directions shown in 9A, but embedded XREFs must be avoided.

Local plant drafting support may, at their discretion, require that all XREF documents be bound to the parent drawing using the XBIND command. Contractors will consult with plant designers/drafters for plant-specific requirements when working with drawings containing externally referenced files.

Printed versions of this document may be out of date. Please consult the online engineering handbook for the most recent version.
This document shall be used and duplicated only in support of PacifiCorp projects. ©2017 by PacifiCorp.

6.10. Voiding and Superseding

The following is the standard procedure for voiding and superseding CAD and image files. The void stamp is a block provided as part of the standard CAD pallet. This block and its attributes must be used as described below.

6.10.1. Voiding CAD Files

Drawings being voided shall have the void stamp placed near the lower right-hand area of the drawing with the attributes completely filled in. If the drawing is being superseded by another drawing, the drawing number(s) shall be referenced in the void stamp. The drawing that supersedes the voided drawing shall have a string of text placed above the title block stating, for example, “THIS DRAWING SUPERSEDES DRAWING 123456.001, REV 3, DATE 6/11/03.” The revision number and revision date shall be that of the latest revision of the voided drawing.

If a drawing is partially superseding another drawing, the superseded note shall state this accordingly: THIS DRAWING PARTIALLY SUPERSEDES DRAWING...

If the drawing is just being voided and not superseded, “N/A” shall be placed in the REMARKS attribute field of the void stamp and the drawing shall not be rev'd up.

If the drawing is being voided, the drawing is updated with the void stamp but is not rev'd up.

6.10.2. Voiding Image Files

To void a stand-alone image file, the file should be temporarily attached to a CAD file as a means of editing and saving the image file through image editing software. In AutoCAD, attach the image, bring in the void stamp, and fill it in. Merge the void stamp into the image file. Save the image file, not the CAD file, and detach it.

7. Block Usage and Development

This section provides guidance on the development of AutoCAD blocks used in company drawings. (See handbook 9A, section 6, *Block Usage and Development*.)

1. All blocks are to be developed on layer “0”, with the color and line type attributes set to bylayer, (unless specific color, line type and layering conventions are wanted for all inserts of the same block). All entities that reside in the block should be drawn using company standards whenever possible.
2. AutoCAD dynamic blocks are powerful; they can limit the amount of time involved in inserting multiple views of the same symbol. One block may provide any one of many possible views for one basic symbol as a selectable option at any time in the editing process. They can also be made to utilize the ability to move, rotate, stretch one or all of the entities within a block.

   While the use of dynamic blocks should be considered, creating the block so that it displays the desired effect can be troublesome. Great care should be taken when creating this type of block. Testing should be done to ensure that the desired effect has been achieved.

Printed versions of this document may be out of date. Please consult the online engineering handbook for the most recent version.
This document shall be used and duplicated only in support of PacifiCorp projects. ©2017 by PacifiCorp.

7.1. Insertion Point

The insertion point should be on snap, (1/32"), to allow proper alignment with any adjoining components.

8. EDMS Compatibility

8.1. Index

An index must accompany all new and edited drawings provided by anyone outside of the thermal generation group. All indices should have the following attributes:

1. The index must be compatible with Excel in a format that defines each field of information in separate columns. Excel file format or “comma delimited” (CSV) formats are preferred. Use a CSV format if it is unclear which Excel version is needed.
2. The index must contain column headings that clearly describe the information contained in each column.
3. The drawing index must contain the information delineated in the legend of template file, *GenerationThermalDrawingIndexTemplate.xlsx*, located internally in the AutoCAD support directory, J:\Shared Data\AutoCad Support\FORMS\GENERATION.
4. Leading and trailing empty spaces in individual cells are not acceptable.
5. All hybrid-related files returned to the company need to be supplied in a separate folder structure from non-hybrid files. For example, AutoCAD files with .TIFF, XREF'd, and any other attached files all need to be saved to folders different from non-hybrid files.
6. Hybrid files need to be in a separate index, or on a separate tab within an index that is separate from non-hybrid files.

9. Handbook Issuing Department

The engineering standards and technical services department of the company published this document. Questions regarding editing, revision history and document output may be directed to engineering publications at eampub@pacificorp.com. Technical questions and comments may be directed to the drafting services group. This handbook document shall be used and duplicated only in support of company projects.

Printed versions of this document may be out of date. Please consult the online engineering handbook for the most recent version.
This document shall be used and duplicated only in support of PacifiCorp projects. ©2017 by PacifiCorp.